RILEY PURGATORY BLUFF CREEK WATERSHED DISTRICT

18681 Lake Drive East
Chanhassen, MN 55317
952-607-6512
www.rpbcwd.org

Riley Purgatory Bluff Creek Watershed District Permit Application Review

Permit No: 2021-082

Considered at Board of Managers Meeting: February 2, 2022

Received complete: January 6, 2022

Applicant: HJ Development, Chris Moe

Representative: CWP West Corp., Trevor Buhl

Project: Mister Car Wash - The project proposes the redevelopment of an existing bank site into a 5,400 SF conveyor-type stand-alone car wash with associated parking, vacuum equipment, lighting, underground utilities, and landscaping. The project includes an underground stormwater infiltration proprietary device to provide volume control, water quality, and rate control.

Location: 17600 MN-7, Minnetonka, Minnesota 55345

Reviewer: Leslie DellAngelo, PE; and Scott Sobiech, PE; Barr Engineering Co.

Proposed Board Action

Manager _____ moved and Manager _____ seconded adoption of the following resolutions based on the permit report that follows and the presentation of the matter at the February 2, 2022 meeting of the managers:

Resolved that the application for Permit 2021-082 is approved, subject to the conditions and stipulations set forth in the Recommendations section of the attached report;

Resolved that on determination by the RPBCWD administrator that the conditions of approval of the permit have been affirmatively resolved, the RPBCWD president or administrator is authorized and directed to sign and deliver Permit 2021-082 to the applicant on behalf of RPBCWD.

Upon vote, the resolutions were adopted, _____ [VOTE TALLY].

Applicable Rule Conformance Summary

Rule	Issue		Conforms to RBPCWD Rules?	Comments
C	**Erosion Control Plan**		See comment.	See rule-specific permit condition C1 related to name of individual responsible for on-site erosion control.
J	**Stormwater Management**	Rate	Yes	
		Volume	See Comment	See stipulation 4 related to verifying the infiltration capacity of the soils and that the volume control capacity is calculated using the measured infiltration rate
		Water Quality	Yes	
		Low Floor Elev.	Yes	
		Maintenance	See Comment	See rule-specific permit condition J1 related to recordation of stormwater facility maintenance declaration.
		Chloride Management	See Comment	See stipulation 3 related to providing a chloride management plan prior to project close-out.
		Wetland Protection	Yes	
L	**Permit Fee Deposit**		Yes	$3,000 deposit fee received January 6, 2022.
M	**Financial Assurance**		See Comment	The financial assurance is calculated at $140,938.

Background

The project proposes the redevelopment of an existing bank into a 5,400 SF conveyor-type stand-alone car wash with associated parking, vacuum equipment, lighting, underground utilities, and landscaping. The project includes an underground stormwater infiltration system to provide volume control, water quality, and rate control. The project site information is summarized in Table 1.

While there are no on-site or adjacent Wetland Conservation Act (WCA) protected wetlands for which wetland buffers would be required, the treated runoff leaving the site from the underground infiltration system is conveyed via storm sewer directly to an off-site protected wetland.

Table 1. Project site information

Site Information	Project Area
Total Site Area (acres)	0.85
Existing Site Impervious Area (acres)	0.71
Disturbed Impervious Area (acres)	0.71 (100%)
Post Construction Site Impervious (acres)	0.73
Addition (increase) in Site Impervious Area (acres)	0.02
Total Disturbed Area (acres)	0.85

Exhibits:

1. Permit application received on November 1, 2021 with associated permit fee received on January 6, 2022. (Incomplete notice was sent on November 19, 2021; materials submitted to complete application on January 6, 2022)
2. Stormwater Management Report dated November 1, 2021 (revised December 20, 2021)
3. Project Plan Set (10 sheets) dated November 1, 2021 (revised December 20, 2021, 14 Sheets)
4. Review Comments dated November 19, 2021
5. Review Comments Applicant Response Letter dated December 14, 2021
6. Existing and Proposed HydroCAD Models received December 21, 2021
7. MIDS Calculator received December 21, 2021
8. Underground Infiltration System Detailed Drawings (8 sheets) received December 21, 2021 (revised January 21, 2022)
9. Geotechnical Evaluation Report dated October 15, 2021
10. Cost estimate received January 21, 2022

<u>Rule Specific Permit Conditions</u>

Rule C: Erosion Prevention and Sediment Control

Because the project will involve 0.85 acres of land-disturbing activities, the project must conform to the erosion prevention and sediment control requirements established in Rule C.

The erosion control plan prepared by Kimley-Horn and Associates, Inc. includes installation of perimeter control (silt fence or sediment control logs), a stabilized rock construction entrance, inlet protection, erosion control blanket, daily inspection, staging areas, placement of a minimum of 6 inches of topsoil (at 5% organic matter), decompaction of areas compacted during construction, and retention of native topsoil onsite to the greatest extent possible. To conform to RPBCWD Rule C requirements, the following revisions are needed:

C1. The Applicant must provide the name, address and phone number of the individual who will remain liable to the District for performance under this rule and maintenance of erosion and sediment-control measures from the time the permitted activities commence until vegetative cover is established.

Rule J: Stormwater Management

Because the project will involve 0.85 acres of land-disturbing activity (i.e., more than 5,000 square feet), the project must meet the criteria of RPBCWD's Stormwater Management rule (Rule J, Subsection 2.1). The criteria listed in Subsection 3.1 will apply to the entire site because the project will disturb more than 50% of the existing impervious surface on the parcel (Rule J, Subsection 2.3).

The applicant is proposing construction of an underground infiltration system to provide the rate control, volume abstraction and water quality management. Pretreatment for runoff entering the underground infiltration system is being provided by catchbasin/manholes with sumps and SAFL Baffles.

Rate Control

In order to meet the rate control criteria listed in Subsection 3.1.a, the 2-, 10-, and 100-year post development peak runoff rates must be equal to or less than the existing discharge rates at all locations where stormwater leaves the site. The applicant used a HydroCAD hydrologic model to simulate runoff rates for pre- and post-development conditions for the 2-, 10-, and 100-year frequency storm events using a nested rainfall distribution, and a 100-year frequency, 10-day snowmelt event. The existing and proposed 2-, 10-, and 100-year frequency discharges from the site are summarized in Table 2 below. The proposed project is in conformance with RPBCWD Rule J, Subsection 3.1.a.

Table 2. Existing and Proposed Peak Runoff Rates

Modeled Discharge Location	2-Year Discharge (cfs)		10-Year Discharge (cfs)		100-Year Discharge (cfs)		10-Day Snowmelt (cfs)	
	Ex	Prop	Ex	Prop	Ex	Prop	Ex	Prop
Co Rd 101 ROW	1.8	<0.1	2.9	0.1	5.1	0.1	0.2	<0.1
State Hwy 7 ROW	<0.1	<0.1	<0.1	<0.1	0.1	<0.1	<0.1	<0.1
Western Property	0.1	<0.1	0.1	<0.1	0.3	0.1	<0.1	<0.1
Low Area	1.0	0.1	1.6	0.7	3.0	2.9	0.1	0.1

Volume Abstraction

Subsection 3.1.b of Rule J requires the abstraction onsite of 1.1 inches of runoff from the regulated impervious surface of the site. An abstraction volume of 2,915 cubic feet is required from the 0.73 acres (31,799 square feet) of regulated impervious area. The proposed underground infiltration system provides 4,007 cubic feet of abstraction volume. Pretreatment for runoff entering the underground infiltration system is being provided by catchbasin/manholes with sumps and SAFL Baffles to conform to Rule J, Subsection 3.1.b.1.

The three soil borings (SB-1, SB-2, and SB-6) were performed by American Engineering Testing, Inc. under or adjacent to the proposed underground infiltration system show that soils in the project area are primarily silty sand and poorly graded sand. Groundwater was not observed at the soil borings under the proposed underground infiltration system (SB-6). Groundwater was observed at the next nearest soil boring (SB-1) at approximately 18 feet below grade, which is about 5 feet below the proposed bottom of the underground infiltration system. The subsurface investigation information summarized Table 3 shows that groundwater is at least 3 feet below the bottom of the proposed underground infiltration system (Rule J, Subsection 3.1.b.2.a).

Table 3. Groundwater Separation Analysis

Proposed BMP	Nearest Subsurface Investigation	Boring is within footprint?	Groundwater Elevation (feet)	BMP Bottom Elevation (feet)	Separation (feet)
Underground Infiltration System	SB-6	Yes	No groundwater observed at boring bottom (approx. el 885)	890.75	5.75
Underground Infiltration System	SB-1	No	Groundwater observed at el 885.11	890.75	5.6

The engineer concurs with the applicant's design infiltration rates of 0.45 inches per hour for silty sand and poorly graded sand based on the guidelines provided in the Mn Stormwater Manual. Based on the design infiltration rate, the engineer concurs that the basins will draw down within 48 hours (Rule J, subsection 3.1b.3). Because of the existing bank drive-thru and canopy are at the location of proposed underground infiltration system, subsurface investigation and infiltration testing was not performed at that BMP location. Per Rule J, Subsection 3.1.b.2.c measured infiltration capacity of the soils at the bottom of the infiltration systems must be provided. The applicant must submit documentation verifying the infiltration capacity of the soils and that the volume control capacity is calculated using the measured infiltration rate. If infiltration capacity is less than needed to conform with the volume abstraction requirement in subsection 3.1b or there is inadequate separation to groundwater, design modifications to achieve compliance with RPBCWD requirements will need to be submitted (in the form of an application for a permit modification or new permit).

The table below summarizes the volume abstraction for the site based on the design infiltration capacity of the underground infiltration system. With the conditions noted above regarding verification of subsurface conditions, the engineer concurs with the submitted information and finds that the proposed project will conform with Rule J, Subsection 3.1.b.

Table 4. Volume Abstraction Summary

Required Abstraction Depth (inches)	Required Abstraction Volume (cubic feet)	Provided Abstraction Depth (inches)	Provided Abstraction Volume (cubic feet)
1.1	2,915	1.51	4,007

Water Quality Management

Subsection 3.1.c of Rule J requires the Applicant to provide volume abstraction in accordance with 3.1b or least 60 percent annual removal efficiency for total phosphorus (TP), and at least 90 percent annual removal efficiency for total suspended solids (TSS) from site runoff, and no net increase in TSS or TP loading leaving the site from existing conditions. Because the underground infiltration system proposed by the

applicant provides more volume abstraction than is required by 3.1b and the engineer concurs with the modeling, the engineer finds that the proposed project is in conformance with Rule J, Subsection 3.1.c.

Low floor Elevation

All new buildings must be constructed such that the lowest floor is at least two feet above the 100-year high-water elevation or one foot above the emergency overflow of a stormwater-management facility according to Rule J, Subsection 3.6a. In addition, a stormwater-management facility must be constructed at an elevation that ensures that no adjacent habitable building will be brought into noncompliance with this requirement according to Rule J, Subsection 3.6b. The low floor elevation of the proposed building is summarized below and shows proposed project is in conformance with Rule J, Subsection 3.6a.

Table 5. Low Floor Summary

Building Riparian to Stormwater Facility	Low Floor Elevation of Building (feet)	Emergency Overflow Elevation of Adjacent Stormwater Facility (feet)	Freeboard to Emergency Overflow (feet)
Proposed Car Wash Building	900.0	894.80	5.2

Maintenance

Subsection 3.7 of Rule J requires the submission of maintenance plan. All stormwater management structures and facilities must be designed for maintenance access and properly maintained in perpetuity to assure that they continue to function as designed. While the applicant provided a draft post construction operation and maintenance plan for review, the following revisions are needed:

J1. Permit applicant must provide a maintenance and inspection declaration. A maintenance declaration template is available on the permits page of the RPBCWD website. (http://www.rpbcwd.org/permits/). A draft declaration must be provided for District review prior to recording.

Chloride Management

Subsection 3.8 of Rule J requires the submission of chloride management plan that designates the individual authorized to implement the chloride management plan and the MPCA-certified salt applicator engaged in implementing the plan. To close out the permit and release the $5,000 in financial assurance held for the purpose of chloride management, the permit applicant must provide a chloride management plan that designates the individual authorized to implement the chloride management plan and the MPCA-certified salt applicator engaged in implementing the plan at the site.

Wetland Protection

In accordance with Rule J, subsection 3.10a, there is no proposed activity subject to Rule J that will alter the site in a manner that increases the bounce in water level, duration of inundation, or change the runout elevation in the subwatershed, for the wetland receiving runoff from the land disturbing activities. Because the applicant's HydroCAD model results demonstrate, and the engineer concurs, that the proposed flow

rate and volumes flowing towards the off-site wetland are less than the under existing conditions, the bounce and inundation will not increase, thus the project meets the Bounce and Inundation criterion.

Rule J, Subsection 3.10b requires that treatment of runoff to high and exceptional value wetlands archive 90 percent total suspended solids removal and 75 percent total phosphorus removal. Because the value of the off-site wetland is unknown, the applicant assumed the wetland is exceptional value. MIDS modeling results show the proposed underground infiltration system provides 93% TSS and 93% TP removals, thus the engineer finds that the proposed project is in conformance with Rule J, Subsection 3.10b.

Rule L: Permit Fee

The RPBCWD permit fee schedule requires permit applicants to submit a permit-fee deposit of $3,000 to be held in escrow and applied to reimburse RPBCWD for the permit-application processing fee and permit review and inspection-related costs. A permit fee deposit of $3,000 was received by Kimley-Horn and Associates, Inc on January 6, 2022.

Rule M: Financial Assurance

	Unit	Unit Cost	# of Units	Total
Rules C: Silt fence:	LF	$2.50	760	$1,900
Inlet protection	EA	$100	1	$100
Rock Entrance	EA	$250	1	$250
Restoration	Ac	$2,500	0.85	$2,125
Rules J: Stormwater Management Underground infiltration system: 125% of engineer's opinion of cost ($95,000)	EA	125% OPC	1	$118,750
Chloride Management	LS	$5,000	1	$5,000
Contingency (10%)		10%		$12,813
Total Financial Assurance				**$140,938**

Applicable General Requirements:

1. The RPBCWD Administrator and Engineer shall be notified at least three days prior to commencement of work.
2. Construction shall be consistent with the plans and specifications approved by the District as a part of the permitting process. The date of the approved plans and specifications is listed on the permit.
3. Construction must be consistent with the plans, specifications, and models that were submitted by the applicant that were the basis of permit approval. The date(s) of the approved plans, specifications, and modeling are listed on the permit. The grant of the permit does not in any way relieve the permittee, its engineer, or other professional consultants of responsibility for the permitted work.
4. The grant of the permit does not relieve the permittee of any responsibility to obtain approval of any other regulatory body with authority.

5. The issuance of this permit does not convey any rights to either real or personal property, or any exclusive privileges, nor does it authorize any injury to private property or any invasion of personal rights, nor any infringement of federal, state, or local laws or regulations.
6. In all cases where the doing by the permittee of anything authorized by this permit involves the taking, using or damaging of any property, rights or interests of any other person or persons, or of any publicly owned lands or improvements or interests, the permittee, before proceeding therewith, must acquire all necessary property rights and interest.
7. RPBCWD's determination to issue this permit was made in reliance on the information provided by the applicant. Any substantive change in the work affecting the nature and extent of applicability of RPBCWD regulatory requirements or substantive changes in the methods or means of compliance with RPBCWD regulatory requirements must be the subject of an application for a permit modification to the RPBCWD.
8. If the conditions herein are met and the permit is issued by RPBCWD, the applicant, by accepting the permit, grants access to the site of the work at all reasonable times during and after construction to authorized representatives of the RPBCWD for inspection of the work.

Findings

1. The proposed project includes the information necessary, plan sheets and erosion control plan for review.
2. The proposed project will conform to Rules C and J if the Rule Specific Permit Conditions listed above are met.

Recommendation:

Approval of the permit contingent upon:

1. Continued compliance with General Requirements.
2. Financial Assurance in the amount of $140,938.
3. Permit applicant must provide the name and contact information of the general contractor responsible for erosion and sediment control at the site. RPBCWD must be notified if the responsible party changes during the permit term.
4. Receipt in recordation a maintenance declaration for the stormwater management facilities. A draft must be approved by the District prior to recordation.
5. The applicant must replenish the permit fee deposit to the original amount due before the permit will be issued.

By accepting the permit, when issued, the applicant agrees to the following stipulations:

1. Per Rule J Subsection 5.6, upon completion of the site work, the permittee must submit as-built drawings demonstrating that at the time of final stabilization the stormwater management facilities conform to design specifications and functions as intended and approved by the District. As-

built/record drawings must be signed by a professional engineer licensed in Minnesota and include, but not limited to:

a) the surveyed bottom elevations, water levels, and general topography of all facilities;
b) the size, type, and surveyed invert elevations of all stormwater facility inlets and outlets;
c) the surveyed elevations of all emergency overflows including stormwater facility, street, and other;
d) other important features to show that the project was constructed as approved by the Managers and protects the public health, welfare, and safety.

2. Providing the following additional close-out materials:
   a) Documentation that constructed infiltration facilities perform as designed. This may include infiltration testing, flood testing, or other with prior approval from RPBCWD
   b) Documentation that disturbed pervious areas remaining pervious have been decompacted per Rule C Subsection 3.2c criteria
3. To close out the permit and release the $5,000 in financial assurance held for the purpose of the chloride management, the permit applicant must provide a signed chloride management plan that designates the individual authorized to implement the chloride management plan and the MPCA-certified salt applicator engaged in implementing the plan at the site.
4. Per Rule J, Subsection 3.1.b.ii measured infiltration capacity of the soils at the bottom of the infiltration system must be provided. The applicant must submit documentation verifying the infiltration capacity of the soils and that the volume control capacity is calculated using the measured infiltration rate. In addition, subsurface soil investigation is needed to verify adequate separation to groundwater (Rule J subsection 3.1.b.2). If infiltration capacity is less than needed to conform with the volume abstraction requirement in subsection 3.1b or there is inadequate separation to groundwater, design modifications to achieve compliance with RPBCWD requirements will need to be submitted (in the form of an application for a permit modification or new permit).

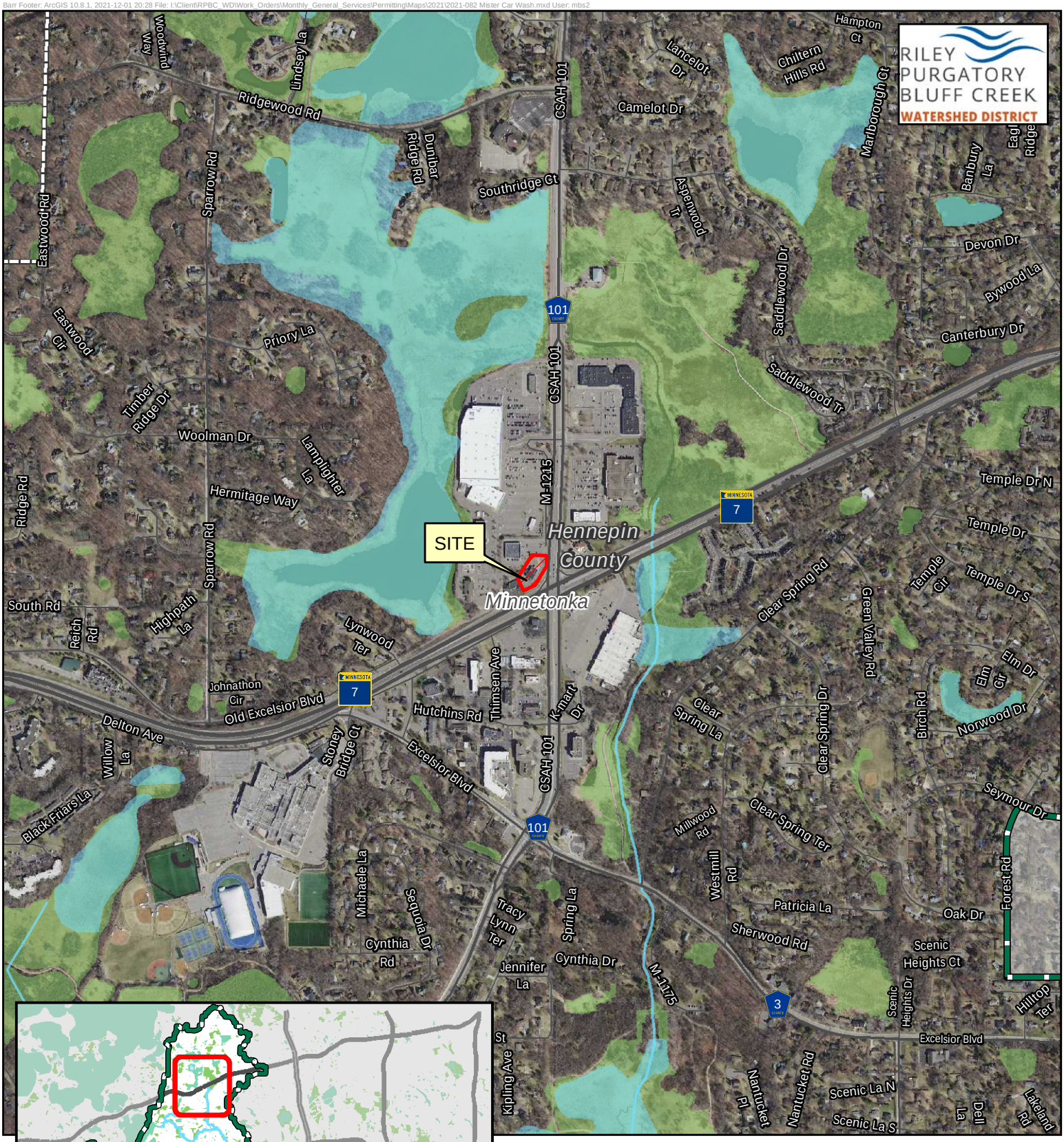

Feet

0 1,000

Permit Location Map

MISTER CAR WASH
Permit 2021-082
Riley Purgatory Bluff Creek
Watershed District

SITE DEVELOPMENT PLANS
FOR

MISTER CAR WASH - MINNETONKA, MN

SECTION 30, TOWNSHIP 117N, RANGE 22W
MINNETONKA, HENNEPIN COUNTY, MN

PROJECT TEAM:

ENGINEER
KIMLEY-HORN AND ASSOCIATES, INC.

PREPARED BY: WILLIAM D. MATZEK, P.E.
767 EUSTIS STREET, SUITE 100
ST. PAUL, MN 55114
TELEPHONE (651) 645-4197

OWNER
MISTER CAR WASH

222 EAST 5TH AVE
TUSCON, AZ 85705
TELEPHONE: (520) 615-4000 EXT. 258
CONTACT: TREVOR BUHL

LANDSCAPE ARCHITECT
KIMLEY-HORN AND ASSOCIATES, INC.
767 EUSTIS STREET, SUITE 100
ST. PAUL, MN 55114
TELEPHONE: (651) 645-4197

ARCHITECT
A23 STUDIOS
711 EAST 9TH STREET
TUCSON, AZ 85719
TELEPHONE: (520) 903-2323
CONTACT: BURAK BEKAT

SURVEYOR
EGAN, FIELD & NOWAK, INC.
1229 TYLER STREET NE, SUITE 100
MINNEAPOLIS, MN 55413
TELEPHONE: (612) 466-3368
CONTACT: CHRISTOPHER TERWEDO

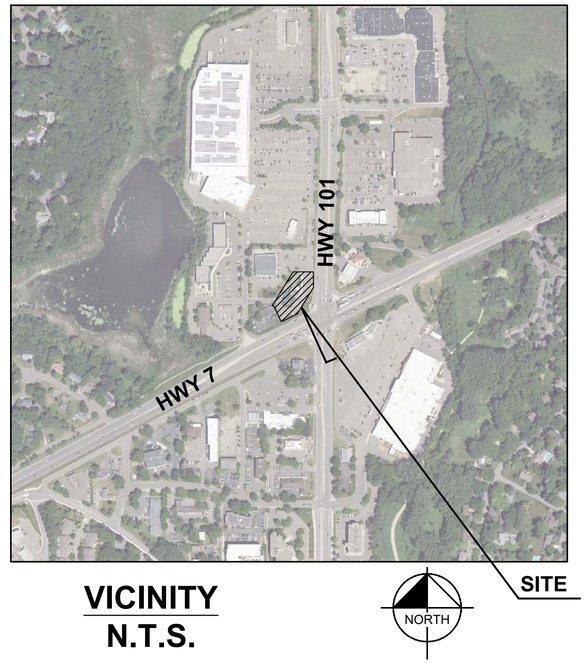

VICINITY
N.T.S.

NOTES:

1. CONTRACTOR SHALL CONFIRM THAT THE EXISTING CONDITIONS FOR THE SITE MATCH WHAT IS SHOWN ON THE DRAWINGS INCLUDED PRIOR TO CONSTRUCTION.
2. IF REPRODUCED, THE SCALES SHOWN ON THESE PLANS ARE BASED ON A ANSI full bleed D (34.00 x 22.00 Inches) SHEET.
3. ALL NECESSARY INSPECTIONS AND/OR CERTIFICATIONS REQUIRED BY CODES AND/OR UTILITY SERVICES COMPANIES SHALL BE PERFORMED PRIOR TO ANNOUNCED BUILDING POSSESSION AND THE FINAL CONNECTION OF SERVICES.
4. ALL GENERAL CONTRACTOR WORK TO BE COMPLETED (EARTHWORK, FINAL UTILITIES, AND FINAL GRADING) BY THE MILESTONE DATE IN PROJECT DOCUMENTS.

Sheet List Table

Sheet Number	Sheet Title
C000	COVER SHEET
C100	GENERAL NOTES
C200	DEMO PLAN
C300	EROSION AND SEDIMENT CONTROL PLAN - PHASE 1
C301	EROSION AND SEDIMENT CONTROL PLAN - PHASE 2
C302	EROSION AND SEDIMENT CONTROL DETAILS
C400	SITE PLAN
C401	SITE DETAILS
C500	GRADING PLAN
C501	GRADING DETAILS
C600	UTILITY PLAN
C601	UTILITY DETAILS
L100	LANDSCAPE PLAN
L101	LANDSCAPE DETAILS

BENCHMARKS

SITE BENCHMARKS:
(LOCATIONS SHOWN ON SURVEY)

SBM #1 TOP OF MINNESOTA DEPARTMENT OF TRANSPORTATION GEOGETIC MONUMENT "2706 K"
ELEVATION=894.936 FEET. (NAVD88)

SBM #2 TOP NUT OF HYDRANT LOCATED SOUTHEASTERLY OF THE MOST SOUTHERLY CORNER OF THE SURVEYED PROPERTY
ELEVATION=904.48 FEET. (NAVD88)

811 Know what's below. Call before you dig.

ISSUED FOR PERMIT - NOT FOR CONSTRUCTION

No.	REVISIONS	DATE	BY

Kimley»Horn
2021 KIMLEY-HORN AND ASSOCIATES, INC.
767 EUSTIS STREET, SUITE 100, ST. PAUL, MN 55114
PHONE: 651-645-4197
WWW.KIMLEY-HORN.COM

I HEREBY CERTIFY THAT THIS PLAN, SPECIFICATION OR REPORT WAS PREPARED BY ME OR UNDER MY DIRECT SUPERVISION AND THAT I AM A DULY LICENSED PROFESSIONAL ENGINEER UNDER THE LAWS OF THE STATE OF MINNESOTA.

WILLIAM D. MATZEK, P.E.
DATE: 12/20/2021 MN LIC. NO. 45790

KHA PROJECT	160284002
DATE	12/20/2021
SCALE	AS SHOWN
DESIGNED BY	ACL
DRAWN BY	AJW
CHECKED BY	WDM

COVER SHEET

MISTER CAR WASH - MINNETONKA, MN
PREPARED FOR
MISTER CAR WASH
MINNETONKA MN

SHEET NUMBER
C000

K:\TWC_LDEV\mister car wash\minnetonka, mn\3 Design\CAD\plansheets\C0-COVER SHEET.dwg December 20, 2021 - 5:57pm

This document, together with the concepts and designs presented herein, as an instrument of service, is intended only for the specific purpose and client for which it was prepared. Reuse of and improper reliance on this document without written authorization and adaptation by Kimley-Horn and Associates, Inc. shall be without liability to Kimley-Horn and Associates, Inc.

K:\TWC_LDEV\mister car wash\minnetonka, mn\3 Design\CAD\plansheets\C1-GENERAL NOTES.dwg December 20, 2021 - 5:57pm

This document, together with the concepts and designs presented herein, as an instrument of service, is intended only for the specific purpose and client for which it was prepared. Reuse of and improper reliance on this document without written authorization and adaptation by Kimley-Horn and Associates, Inc. shall be without liability to Kimley-Horn and Associates, Inc.

GENERAL CONSTRUCTION NOTES

1. THE CONTRACTOR AND SUBCONTRACTORS SHALL OBTAIN A COPY OF THE MN DEPARTMENT OF TRANSPORTATION "STANDARD SPECIFICATIONS FOR CONSTRUCTION" (LATEST EDITION) AND BECOME FAMILIAR WITH THE CONTENTS PRIOR TO COMMENCING WORK, AND, UNLESS OTHERWISE NOTED, ALL WORK SHALL CONFORM AS APPLICABLE TO THESE STANDARDS AND SPECIFICATIONS.

2. THE CONTRACTOR SHALL BE RESPONSIBLE FOR FURNISHING ALL MATERIAL AND LABOR TO CONSTRUCT THE FACILITY AS SHOWN AND DESCRIBED IN THE CONSTRUCTION DOCUMENTS IN ACCORDANCE WITH THE APPROPRIATE APPROVING AUTHORITIES, SPECIFICATIONS AND REQUIREMENTS. CONTRACTOR SHALL CLEAR AND GRUB ALL AREAS UNLESS OTHERWISE INDICATED, REMOVING TREES, STUMPS, ROOTS, MUCK, EXISTING PAVEMENT AND ALL OTHER DELETERIOUS MATERIAL.

3. THE EXISTING SUBSURFACE UTILITY INFORMATION IN THIS PLAN IS QUALITY LEVEL "D" UNLESS OTHERWISE NOTED. THIS QUALITY LEVEL WAS DETERMINED ACCORDING TO THE GUIDELINES OF CI/ACSE 38/02, ENTITLED STANDARD GUIDELINES FOR THE COLLECTION AND DEPICTION OF SUBSURFACE QUALITY DATA BY THE FHA. EXISTING UTILITIES SHOWN ARE LOCATED ACCORDING TO THE INFORMATION AVAILABLE TO THE ENGINEER AT THE TIME OF THE TOPOGRAPHIC SURVEY AND HAVE NOT BEEN INDEPENDENTLY VERIFIED BY THE OWNER OR THE ENGINEER. GUARANTEE IS NOT MADE THAT ALL EXISTING UNDERGROUND UTILITIES ARE SHOWN OR THAT THE LOCATION OF THOSE SHOWN ARE ENTIRELY ACCURATE. FINDING THE ACTUAL LOCATION OF ANY EXISTING UTILITIES IS THE CONTRACTOR'S RESPONSIBILITY AND SHALL BE DONE BEFORE COMMENCING ANY WORK IN THE VICINITY. FURTHERMORE, THE CONTRACTOR SHALL BE FULLY RESPONSIBLE FOR ANY AND ALL DAMAGES DUE TO THE CONTRACTOR'S FAILURE TO EXACTLY LOCATE AND PRESERVE ANY AND ALL UNDERGROUND UTILITIES. THE OWNER OR ENGINEER WILL ASSUME NO LIABILITY FOR ANY DAMAGES SUSTAINED OR COST INCURRED BECAUSE OF THE OPERATIONS IN THE VICINITY OF EXISTING UTILITIES OR STRUCTURES, NOR FOR TEMPORARY BRACING AND SHORING OF SAME. IF IT IS NECESSARY TO SHORE, BRACE, SWING OR RELOCATE A UTILITY, THE UTILITY COMPANY OR DEPARTMENT AFFECTED SHALL BE CONTACTED AND THEIR PERMISSION OBTAINED REGARDING THE METHOD TO USE FOR SUCH WORK.

4. IT IS THE CONTRACTOR'S RESPONSIBILITY TO CONTACT THE VARIOUS UTILITY COMPANIES WHICH MAY HAVE BURIED OR AERIAL UTILITIES WITHIN OR NEAR THE CONSTRUCTION AREA BEFORE COMMENCING WORK. THE CONTRACTOR SHALL PROVIDE 48 HOURS MINIMUM NOTICE TO ALL UTILITY COMPANIES PRIOR TO BEGINNING CONSTRUCTION.

5. THE CONTRACTOR SHALL BE RESPONSIBLE FOR OBTAINING ALL REQUIRED CONSTRUCTION PERMITS AND BONDS IF REQUIRED PRIOR TO CONSTRUCTION.

6. THE CONTRACTOR SHALL HAVE AVAILABLE AT THE JOB SITE AT ALL TIMES ONE COPY OF THE CONSTRUCTION DOCUMENTS INCLUDING PLANS, SPECIFICATIONS, GEOTECHNICAL REPORT AND SPECIAL CONDITIONS AND COPIES OF ANY REQUIRED CONSTRUCTION PERMITS.

7. ANY DISCREPANCIES ON THE DRAWINGS SHALL BE IMMEDIATELY BROUGHT TO THE ATTENTION OF THE OWNER AND ENGINEER BEFORE COMMENCING WORK. NO FIELD CHANGES OR DEVIATIONS FROM DESIGN ARE TO BE MADE WITHOUT PRIOR APPROVAL OF THE OWNER AND NOTIFICATION TO THE ENGINEER.

8. ALL COPIES OF COMPACTION, CONCRETE AND OTHER REQUIRED TEST RESULTS ARE TO BE SENT TO THE OWNER DIRECTLY FROM THE TESTING AGENCY.

9. THE CONTRACTOR SHALL BE RESPONSIBLE FOR DOCUMENTING AND MAINTAINING AS-BUILT INFORMATION WHICH SHALL BE RECORDED AS CONSTRUCTION PROGRESSES OR AT THE COMPLETION OF APPROPRIATE CONSTRUCTION INTERVALS AND SHALL BE RESPONSIBLE FOR PROVIDING AS-BUILT DRAWINGS TO THE OWNER FOR THE PURPOSE OF CERTIFICATION TO JURISDICTIONAL AGENCIES AS REQUIRED. ALL AS-BUILT DATA SHALL BE COLLECTED BY A STATE OF MN PROFESSIONAL LAND SURVEYOR WHOSE SERVICES ARE ENGAGED BY THE CONTRACTOR.

10. ANY WELLS DISCOVERED ON SITE THAT WILL HAVE NO USE MUST BE PLUGGED BY A LICENSED WELL DRILLING CONTRACTOR IN A MANNER APPROVED BY ALL JURISDICTIONAL AGENCIES. CONTRACTOR SHALL BE RESPONSIBLE FOR OBTAINING ANY WELL ABANDONMENT PERMITS REQUIRED.

11. ANY WELL DISCOVERED DURING EARTH MOVING OR EXCAVATION SHALL BE REPORTED TO THE APPROPRIATE JURISDICTIONAL AGENCIES WITHIN 24 HOURS AFTER DISCOVERY IS MADE.

12. THE CONTRACTOR SHALL BE RESPONSIBLE FOR VERIFYING THAT THE PROPOSED IMPROVEMENTS SHOWN ON THE PLANS DO NOT CONFLICT WITH ANY KNOWN EXISTING OR OTHER PROPOSED IMPROVEMENTS. IF ANY CONFLICTS ARE DISCOVERED, THE CONTRACTOR SHALL NOTIFY THE OWNER PRIOR TO INSTALLATION OF ANY PORTION OF THE SITE WORK THAT WOULD BE AFFECTED. FAILURE TO NOTIFY OWNER OF AN IDENTIFIABLE CONFLICT PRIOR TO PROCEEDING WITH INSTALLATION RELIEVES OWNER OF ANY OBLIGATION TO PAY FOR A RELATED CHANGE ORDER.

13. SHOULD CONTRACTOR ENCOUNTER ANY DEBRIS LADEN SOIL, STRUCTURES NOT IDENTIFIED IN THE DOCUMENTS, OR OTHER SOURCE OF POTENTIAL CONTAMINATION, THEY SHALL IMMEDIATELY CONTACT THE ENGINEER AND OWNER.

EROSION CONTROL MAINTENANCE

ALL MEASURES STATED ON THE EROSION AND SEDIMENT CONTROL PLAN, AND IN THE STORM WATER POLLUTION PREVENTION PLAN, SHALL BE MAINTAINED IN FULLY FUNCTIONAL CONDITION AS REQUIRED BY ALL JURISDICTIONS UNTIL NO LONGER REQUIRED FOR A COMPLETED PHASE OF WORK OR FINAL STABILIZATION OF THE SITE. ALL EROSION AND SEDIMENTATION CONTROL MEASURES SHALL BE CHECKED BY A CERTIFIED PERSON AT LEAST ONCE EVERY 7 CALENDAR DAYS AND WITHIN 24 HOURS OF THE END OF A 0.5" RAINFALL EVENT, AND CLEANED AND REPAIRED IN ACCORDANCE WITH THE FOLLOWING:

INLET PROTECTION DEVICES AND BARRIERS SHALL BE REPAIRED OR REPLACED IF THEY SHOW SIGNS OF UNDERMINING, OR DETERIORATION.

1. ALL SEEDED AREAS SHALL BE CHECKED REGULARLY TO SEE THAT A GOOD STAND IS MAINTAINED. AREAS SHOULD BE FERTILIZED, WATERED AND RESEEDED AS NEEDED. FOR MAINTENANCE REQUIREMENTS REFER TO THE STANDARD SPECIFICATIONS.

2. SILT FENCES SHALL BE REPAIRED TO THEIR ORIGINAL CONDITIONS IF DAMAGED. SEDIMENT SHALL BE REMOVED FROM THE SILT FENCES WHEN IT REACHES ONE-THIRD THE HEIGHT OF THE SILT FENCE.

3. THE CONSTRUCTION ENTRANCE(S) SHALL BE MAINTAINED IN A CONDITION WHICH WILL PREVENT TRACKING OR FLOW OF MUD ONTO PUBLIC RIGHTS-OF-WAY. THIS MAY REQUIRE PERIODIC TOP DRESSING OF THE CONSTRUCTION ENTRANCES AS CONDITIONS DEMAND.

4. THE TEMPORARY PARKING AND STORAGE AREA SHALL BE KEPT IN GOOD CONDITION (SUITABLE FOR PARKING AND STORAGE). THIS MAY REQUIRE PERIODIC TOP DRESSING OF THE TEMPORARY PARKING AS CONDITIONS DEMAND.

5. ALL MAINTENANCE OPERATIONS SHALL BE DONE IN A TIMELY MANNER BUT IN NO CASE LATER THAN 2 CALENDAR DAYS FOLLOWING THE INSPECTION.

TYPICAL OWNER/ENGINEER OBSERVATIONS

CONTRACTOR SHALL NOTIFY OWNER AND/OR ENGINEER 48 HOURS IN ADVANCE OF THE FOLLOWING ACTIVITIES:

- PRE-CONSTRUCTION MEETING, SUBGRADE PREPARATION, BASE INSTALLATION ASPHALT INSTALLATION, UNDERGROUND PIPING AND UTILITIES INSTALLATION, INSTALLATION OF STRUCTURES, CHECK VALVES, HYDRANTS, METERS, ETC., SIDEWALK INSTALLATION, CONNECTIONS TO WATER AND SEWER MAINS, TESTS OF UTILITIES

EROSION CONTROL NOTES

1. THE STORM WATER POLLUTION PREVENTION PLAN ("SWPPP") IS COMPRISED OF THE EROSION CONTROL PLAN, THE STANDARD DETAILS, THE PLAN NARRATIVE, ATTACHMENTS INCLUDED IN THE SPECIFICATIONS OF THE SWPPP, PLUS THE PERMIT AND ALL SUBSEQUENT REPORTS AND RELATED DOCUMENTS.

2. ALL CONTRACTORS AND SUBCONTRACTORS INVOLVED WITH STORM WATER POLLUTION PREVENTION SHALL OBTAIN A COPY OF THE STORM WATER POLLUTION PREVENTION PLAN AND THE STATE OF MN NATIONAL POLLUTANT DISCHARGE ELIMINATION SYSTEM GENERAL PERMIT (NPDES PERMIT) AND BECOME FAMILIAR WITH THEIR CONTENTS.

3. BEST MANAGEMENT PRACTICES (BMP'S) AND CONTROLS SHALL CONFORM TO FEDERAL, STATE, OR LOCAL REQUIREMENTS OR MANUAL OF PRACTICE, AS APPLICABLE. THE CONTRACTOR SHALL IMPLEMENT ADDITIONAL CONTROLS AS DIRECTED BY THE PERMITTING AGENCY OR OWNER.

4. SITE ENTRY AND EXIT LOCATIONS SHALL BE MAINTAINED IN A CONDITION THAT WILL PREVENT THE TRACKING OR FLOWING OF SEDIMENT ONTO PUBLIC ROADWAYS. ALL SEDIMENT SPILLED, DROPPED, WASHED, OR TRACKED ON A PUBLIC ROADWAY MUST BE REMOVED IMMEDIATELY. WHEN WASHING IS REQUIRED TO REMOVE SEDIMENT PRIOR TO ENTRANCE ONTO A PUBLIC ROADWAY, IT SHALL BE DONE IN AN AREA STABILIZED WITH CRUSHED STONE WHICH DRAINS INTO AN APPROVED SEDIMENT BASIN. ALL FINES IMPOSED FOR DISCHARGING SEDIMENT ONTO PUBLIC AREAS SHALL BE PAID BY THE CONTRACTOR.

5. TEMPORARY SEEDING OR OTHER APPROVED METHODS OF STABILIZATION SHALL BE INITIATED WITHIN 7 DAYS OF THE LAST DISTURBANCE ON ANY AREA OF THE SITE.

6. THE CONTRACTOR SHALL MINIMIZE CLEARING TO THE MAXIMUM EXTENT PRACTICAL OR AS REQUIRED BY THE GENERAL PERMIT.

7. CONTRACTOR SHALL DENOTE ON PLAN THE TEMPORARY PARKING AND STORAGE AREA WHICH SHALL ALSO BE USED AS THE EQUIPMENT MAINTENANCE AND CLEANING AREA, EMPLOYEE PARKING AREA, AND AREA FOR LOCATING PORTABLE FACILITIES, OFFICE TRAILERS, AND TOILET FACILITIES.

8. ALL WASH WATER (CONCRETE TRUCKS, VEHICLE CLEANING, EQUIPMENT CLEANING, ETC.) SHALL BE DETAINED AND PROPERLY TREATED OR DISPOSED.

9. SUFFICIENT OIL AND GREASE ABSORBING MATERIALS AND FLOTATION BOOMS SHALL BE MAINTAINED ON SITE OR READILY AVAILABLE TO CONTAIN AND CLEAN-UP FUEL OR CHEMICAL SPILLS AND LEAKS.

10. THE CONTRACTOR SHALL BE RESPONSIBLE FOR DUST CONTROL ON SITE. THE USE OF MOTOR OILS AND OTHER PETROLEUM BASED OR TOXIC LIQUIDS FOR DUST SUPPRESSION OPERATIONS IS PROHIBITED.

11. RUBBISH, TRASH, GARBAGE, LITTER, OR OTHER SUCH MATERIALS SHALL BE DEPOSITED INTO SEALED CONTAINERS. MATERIALS SHALL BE PREVENTED FROM LEAVING THE PREMISES THROUGH THE ACTION OF WIND OR STORM WATER DISCHARGE INTO DRAINAGE DITCHES OR WATERS OF THE STATE.

12. ALL STORM WATER POLLUTION PREVENTION MEASURES PRESENTED ON THE PLAN SHALL BE INITIATED AS SOON AS IS PRACTICABLE.

13. ALL STAGING AREAS, STOCKPILES, SPOILS, ETC. SHALL BE LOCATED SUCH THAT THEY WILL NOT ADVERSELY AFFECT STORM WATER QUALITY. OTHERWISE, COVERING OR ENCIRCLING THESE AREAS WITH SOME PROTECTIVE MEASURE WILL BE NECESSARY.

14. CONTRACTOR SHALL BE RESPONSIBLE FOR RE-ESTABLISHING ANY EROSION CONTROL DEVICE WHICH THEY DISTURB. EACH CONTRACTOR SHALL NOTIFY THE OWNER'S REPRESENTATIVE OF ANY DEFICIENCIES IN THE ESTABLISHED EROSION CONTROL MEASURES THAT MAY LEAD TO UNAUTHORIZED DISCHARGE OR STORM WATER POLLUTION, SEDIMENTATION, OR OTHER POLLUTANTS. UNAUTHORIZED POLLUTANTS INCLUDE (BUT ARE NOT LIMITED TO) EXCESS CONCRETE DUMPING OR CONCRETE RESIDUE, PAINTS, SOLVENTS, GREASES, FUEL AND LUBRICANT OIL, PESTICIDES, AND ANY SOLID WASTE MATERIALS.

15. EROSION CONTROL DEVICES SHOWN ON THESE PLANS SHALL BE INSTALLED PRIOR TO THE START OF LAND-DISTURBING ACTIVITIES ON THE PROJECT.

16. ALL EROSION CONTROL DEVICES ARE TO BE INSTALLED IN ACCORDANCE WITH THE APPROVED PLANS AND SPECIFICATIONS FOR THIS PROJECT. CHANGES ARE TO BE APPROVED BEFORE CONSTRUCTION BY THE DESIGN ENGINEER AND THE CITY OF MINNETONKA ENGINEERING DIVISION.

17. IF THE EROSION CONTROL PLAN AS APPROVED CANNOT CONTROL EROSION AND OFF-SITE SEDIMENTATION FROM THE PROJECT, THE EROSION CONTROL PLAN WILL HAVE TO BE REVISED AND/OR ADDITIONAL EROSION CONTROL DEVICES WILL BE REQUIRED ON SITE. ANY REVISIONS TO THE EROSION CONTROL PLAN MADE BY THE CONTRACTOR MUST BE APPROVED BY THE ENGINEER.

PAVING AND STRIPING NOTES

1. ALL PAVING, CONSTRUCTION, MATERIALS, AND WORKMANSHIP WITHIN JURISDICTION'S RIGHT-OF-WAY SHALL BE IN ACCORDANCE WITH LOCAL OR COUNTY SPECIFICATIONS AND STANDARDS (LATEST EDITION) OR MN/DOT SPECIFICATIONS AND STANDARDS (LATEST EDITION) IF NOT COVERED BY LOCAL OR COUNTY REGULATIONS.

2. ALL SIGNS, PAVEMENT MARKINGS, AND OTHER TRAFFIC CONTROL DEVICES SHALL CONFORM TO MANUAL ON UNIFORM TRAFFIC CONTROL DEVICES (M.U.T.C.D) AND CITY STANDARDS.

3. CONTRACTOR SHALL FURNISH ALL PAVEMENT MARKINGS FOR FIRE LANES, ROADWAY LANES, PARKING STALLS, ACCESSIBLE PARKING SYMBOLS, ACCESS AISLES, STOP BARS AND SIGNS, AND MISCELLANEOUS STRIPING WITHIN THE PARKING LOT AS SHOWN ON THE PLANS.

4. ALL EXPANSION JOINTS SHALL EXTEND THROUGH THE CURB.

5. THE MINIMUM LENGTH OF OFFSET JOINTS AT RADIUS POINTS SHALL BE 2 FEET.

6. ALL JOINTS, INCLUDING EXPANSION JOINTS WITH REMOVABLE TACK STRIPS, SHALL BE SEALED WITH JOINT SEALANT.

7. THE MATERIALS AND PROPERTIES OF ALL CONCRETE SHALL MEET THE APPLICABLE REQUIREMENTS IN THE A.C.I. (AMERICAN CONCRETE INSTITUTE) MANUAL OF CONCRETE PRACTICE.

8. CONTRACTOR SHALL APPLY A SECOND COATING OVER ALL PAVEMENT MARKINGS PRIOR TO ACCEPTANCE BY OWNER FOLLOWED BY A COAT OF GLASS BEADS AS APPLICABLE PER THE PROJECT DOCUMENTS.

9. ANY EXISTING PAVEMENT, CURBS AND/OR SIDEWALKS DAMAGED OR REMOVED WILL BE REPAIRED BY THE CONTRACTOR AT HIS EXPENSE TO THE SATISFACTION OF THE ENGINEER AND OWNER.

10. BEFORE PLACING PAVEMENT, CONTRACTOR SHALL VERIFY SUITABLE ACCESSIBLE ROUTES (PER A.D.A). GRADING FOR ALL SIDEWALKS AND ACCESSIBLE ROUTES INCLUDING CROSSING DRIVEWAYS SHALL CONFORM TO CURRENT ADA STATE/NATIONAL STANDARDS. IN NO CASE SHALL ACCESSIBLE RAMP SLOPES EXCEED 1 VERTICAL TO 12 HORIZONTAL. IN NO CASE SHALL SIDEWALK CROSS SLOPES EXCEED 2% . IN NO CASE SHALL LONGITUDINAL SIDEWALK SLOPES EXCEED 5%. IN NO CASE SHALL ACCESSIBLE PARKING STALLS OR AISLES EXCEED 2% (1.5% TARGET) IN ALL DIRECTIONS. SIDEWALK ACCESS TO EXTERNAL BUILDING DOORS AND GATES SHALL BE ADA COMPLIANT. CONTRACTOR SHALL NOTIFY ENGINEER IMMEDIATELY IF ADA CRITERIA CANNOT BE MET IN ANY LOCATION PRIOR TO PAVING. NO CONTRACTOR CHANGE ORDERS WILL BE ACCEPTED FOR A.D.A COMPLIANCE ISSUES.

11. MAXIMUM JOINT SPACING IS TWICE THE DEPTH OF THE CONCRETE PAVEMENT IN FEET.

GRADING AND DRAINAGE NOTES

1. GENERAL CONTRACTOR AND ALL SUBCONTRACTORS SHALL VERIFY THE SUITABILITY OF ALL EXISTING AND PROPOSED SITE CONDITIONS INCLUDING GRADES AND DIMENSIONS BEFORE START OF CONSTRUCTION. THE ENGINEER SHALL BE NOTIFIED IMMEDIATELY OF ANY DISCREPANCIES.

2. THE CONTRACTOR SHALL GRADE THE SITE TO THE ELEVATIONS INDICATED AND SHALL ADJUST BMP'S AS NECESSARY AND REGRADE WASHOUTS WHERE THEY OCCUR AFTER EVERY RAINFALL UNTIL A GRASS STAND IS WELL ESTABLISHED OR ADEQUATE STABILIZATION OCCURS.

3. CONTRACTOR SHALL ENSURE THERE IS POSITIVE DRAINAGE FROM THE PROPOSED BUILDINGS SO THAT SURFACE RUNOFF WILL DRAIN BY GRAVITY TO NEW OR EXISTING DRAINAGE OUTLETS. CONTRACTOR SHALL ENSURE NO PONDING OCCURS IN PAVED AREAS AND SHALL NOTIFY ENGINEER IF ANY GRADING DISCREPANCIES ARE FOUND IN THE EXISTING AND PROPOSED GRADES PRIOR TO PLACEMENT OF PAVEMENT OR UTILITIES.

4. CONTRACTOR SHALL PROTECT ALL MANHOLE COVERS, VALVE COVERS, VAULT LIDS, FIRE HYDRANTS, POWER POLES, GUY WIRES, AND TELEPHONE BOXES THAT ARE TO REMAIN IN PLACE AND UNDISTURBED DURING CONSTRUCTION. EXISTING CASTINGS AND STRUCTURES TO REMAIN SHALL BE ADJUSTED TO MATCH THE PROPOSED FINISHED GRADES.

5. BACKFILL FOR UTILITY LINES SHALL BE PLACED PER DETAILS, STANDARDS, AND SPECIFICATIONS SO THAT THE UTILITY WILL BE STABLE. WHERE UTILITY LINES CROSS THE PARKING LOT, THE TOP 6 INCHES SHALL BE COMPACTED SIMILARLY TO THE REMAINDER OF THE LOT. UTILITY DITCHES SHALL BE VISUALLY INSPECTED DURING THE EXCAVATION PROCESS TO ENSURE THAT UNDESIRABLE FILL IS NOT USED.

6. CONTRACTOR IS RESPONSIBLE FOR THE REMOVAL AND REPLACEMENT OF 4" OF TOPSOIL AT COMPLETION OF WORK. ALL UNPAVED AREAS IN EXISTING RIGHTS-OF-WAY DISTURBED BY CONSTRUCTION SHALL BE REGRADED AND SODDED.

7. AFTER PLACEMENT OF SUBGRADE AND PRIOR TO PLACEMENT OF PAVEMENT, CONTRACTOR SHALL TEST AND OBSERVE PAVEMENT AREAS FOR EVIDENCE OF PONDING. ALL AREAS SHALL ADEQUATELY DRAIN TOWARDS THE INTENDED STRUCTURE TO CONVEY STORM RUNOFF. CONTRACTOR SHALL IMMEDIATELY NOTIFY OWNER AND ENGINEER IF ANY DISCREPANCIES ARE DISCOVERED.

8. WHERE EXISTING PAVEMENT IS INDICATED TO BE REMOVED AND REPLACED, THE CONTRACTOR SHALL SAW CUT FULL DEPTH FOR A SMOOTH AND STRAIGHT JOINT AND REPLACE THE PAVEMENT WITH THE SAME TYPE AND DEPTH OF MATERIAL AS EXISTING OR AS INDICATED.

9. THE CONTRACTOR SHALL INSTALL PROTECTION OVER ALL DRAINAGE STRUCTURES FOR THE DURATION OF CONSTRUCTION AND UNTIL ACCEPTANCE OF THE PROJECT BY THE OWNER. ALL DRAINAGE STRUCTURES SHALL BE CLEANED OF DEBRIS AS REQUIRED DURING AND AT THE END OF CONSTRUCTION TO PROVIDE POSITIVE DRAINAGE FLOWS.

10. IF DEWATERING IS REQUIRED, THE CONTRACTOR SHALL OBTAIN ANY APPLICABLE REQUIRED PERMITS. THE CONTRACTOR IS TO COORDINATE WITH THE OWNER AND THE DESIGN ENGINEER PRIOR TO ANY EXCAVATION.

11. FIELD DENSITY TESTS SHALL BE TAKEN AT INTERVALS IN ACCORDANCE WITH THE LOCAL JURISDICTIONAL AGENCY OR TO MN/DOT STANDARDS. IN THE EVENT THAT THE CONTRACT DOCUMENTS AND THE JURISDICTIONAL AGENCY REQUIREMENTS ARE NOT IN AGREEMENT, THE MOST STRINGENT SHALL GOVERN.

12. ALL SLOPES AND AREAS DISTURBED BY CONSTRUCTION SHALL BE GRADED AS PER PLANS. THE AREAS SHALL THEN BE SODDED OR SEEDED AS SPECIFIED IN THE PLANS, FERTILIZED, MULCHED, WATERED AND MAINTAINED UNTIL HARDY GRASS GROWTH IS ESTABLISHED IN ALL AREAS. ANY AREAS DISTURBED FOR ANY REASON PRIOR TO FINAL ACCEPTANCE OF THE JOB SHALL BE CORRECTED BY THE CONTRACTOR AT NO ADDITIONAL COST TO THE OWNER. ALL EARTHEN AREAS WILL BE SODDED OR SEEDED AND MULCHED AS SHOWN ON THE LANDSCAPING PLAN.

13. THE CONTRACTOR SHALL BE RESPONSIBLE FOR THE CONTROL OF DUST AND DIRT RISING AND SCATTERING IN THE AIR DURING CONSTRUCTION AND SHALL PROVIDE WATER SPRINKLING OR OTHER SUITABLE METHODS OF CONTROL. THE CONTRACTOR SHALL COMPLY WITH ALL GOVERNING REGULATIONS PERTAINING TO ENVIRONMENTAL PROTECTION.

14. SOD, WHERE CALLED FOR, MUST BE INSTALLED AND MAINTAINED ON EXPOSED SLOPES WITHIN 48 HOURS OF COMPLETING FINAL GRADING, AND AT ANY OTHER TIME AS NECESSARY, TO PREVENT EROSION, SEDIMENTATION OR TURBID DISCHARGES.

15. THE CONTRACTOR SHALL ENSURE THAT LANDSCAPE ISLAND PLANTING AREAS AND OTHER PLANTING AREAS ARE NOT COMPACTED AND DO NOT CONTAIN ROAD BASE MATERIALS. THE CONTRACTOR SHALL ALSO EXCAVATE AND REMOVE ALL UNDESIRABLE MATERIAL FROM ALL AREAS ON THE SITE TO BE PLANTED AND PROPERLY DISPOSED OF IN A LEGAL MANNER.

16. THE CONTRACTOR SHALL INSTALL ALL UNDERGROUND STORM WATER PIPING PER MANUFACTURER'S RECOMMENDATIONS AND MN/DOT SPECIFICATION.

17. ALL CONCRETE/ASPHALT SHALL BE INSTALLED PER GEOTECH REPORT, CITY OF MINNETONKA AND MN/DOT SPECIFICATIONS.

18. SPOT ELEVATIONS ARE TO FLOWLINE OF CURB UNLESS OTHERWISE NOTED.

19. LIMITS OF CONSTRUCTION ARE TO THE PROPERTY LINE UNLESS OTHERWISE SPECIFIED ON THE PLAN.

20. IMMEDIATELY REPORT TO THE OWNER ANY DISCREPANCIES FOUND BETWEEN ACTUAL FIELD CONDITIONS AND CONSTRUCTION DOCUMENTS.

21. THE CONTRACTOR IS RESPONSIBLE FOR LOCATING AND PROTECTING EXISTING UTILITIES, AND SHALL REPAIR ALL DAMAGE TO EXISTING UTILITIES THAT OCCUR DURING CONSTRUCTION WITHOUT COMPENSATION.

22. BLEND NEW EARTHWORK SMOOTHLY TO TRANSITION BACK TO EXISTING GRADE.

23. ALL PROPOSED GRADES ONSITE SHALL BE 3:1 OR FLATTER UNLESS OTHERWISE INDICATED ON THE PLANS. ANY SLOPES STEEPER THAN 4:1 REQUIRE EROSION AND SEDIMENT CONTROL BLANKET.

24. ADHERE TO ALL TERMS AND CONDITIONS AS NECESSARY IN THE GENERAL N.P.D.E.S. PERMIT AND STORMWATER POLLUTION PREVENTION PLAN FOR STORMWATER DISCHARGE ASSOCIATED WITH CONSTRUCTION ACTIVITIES.

25. ADJUST AND/OR CUT EXISTING PAVEMENT AS NECESSARY TO ASSURE A SMOOTH FIT AND CONTINUOUS GRADE.

26. CONTRACTOR SHALL ENSURE MINIMUM GRADES ARE MET WITHIN PAVED AREAS, 1.2% FOR ASPHALT PAVING AND 0.6% FOR CONCRETE PAVING.

3RD PARTY TEST REPORTS REQ'D

TEST REPORTS REQUIRED FOR CLOSE OUT INCLUDE, BUT ARE NOT LIMITED TO:

- DENSITY TEST REPORTS
- BACTERIOLOGICAL TESTS OF WATER SYSTEM
- PRESSURE TEST OF WATER/SEWER
- LEAK TESTS ON SEWER SYSTEM AND GREASE TRAPS
- ANY OTHER TESTING REQUIRED BY THE AGENCY/MUNICIPALITY

WATER STORM SEWER & SANITARY SEWER NOTES

1. THE CONTRACTOR SHALL CONSTRUCT GRAVITY SEWER LATERALS, MANHOLES, GRAVITY SEWER LINES, AND DOMESTIC WATER AND FIRE PROTECTION SYSTEM AS SHOWN ON THESE PLANS. THE CONTRACTOR SHALL FURNISH ALL NECESSARY MATERIALS, EQUIPMENT, MACHINERY, TOOLS, MEANS OF TRANSPORTATION AND LABOR NECESSARY TO COMPLETE THE WORK IN FULL AND COMPLETE ACCORDANCE WITH THE SHOWN, DESCRIBED AND REASONABLY INTENDED REQUIREMENTS OF THE CONTRACT DOCUMENTS AND JURISDICTIONAL AGENCY REQUIREMENTS. IN THE EVENT THAT THE CONTRACT DOCUMENTS AND THE JURISDICTIONAL AGENCY REQUIREMENTS ARE NOT IN AGREEMENT, THE MOST STRINGENT SHALL GOVERN.

2. ALL EXISTING UNDERGROUND UTILITY LOCATIONS SHOWN ARE APPROXIMATE. THE CONTRACTOR SHALL COMPLY WITH ALL REQUIREMENTS FOR UTILITY LOCATION AND COORDINATION IN ACCORDANCE WITH THE NOTES CONTAINED IN THE GENERAL CONSTRUCTION SECTION OF THIS SHEET.

3. THE CONTRACTOR SHALL RESTORE ALL DISTURBED VEGETATION IN KIND, UNLESS SHOWN OTHERWISE.

4. DEFLECTION OF PIPE JOINTS AND CURVATURE OF PIPE SHALL NOT EXCEED THE MANUFACTURER'S SPECIFICATIONS. SECURELY CLOSE ALL OPEN ENDS OF PIPE AND FITTINGS WITH A WATERTIGHT PLUG WHEN WORK IS NOT IN PROGRESS. THE INTERIOR OF ALL PIPES SHALL BE CLEAN AND JOINT SURFACES WIPED CLEAN AND DRY AFTER THE PIPE HAS BEEN LOWERED INTO THE TRENCH. VALVES SHALL BE PLUMB AND LOCATED ACCORDING TO THE PLANS.

5. ALL PIPE AND FITTINGS SHALL BE CAREFULLY STORED FOLLOWING MANUFACTURER'S RECOMMENDATIONS. CARE SHALL BE TAKEN TO AVOID DAMAGE TO THE COATING OR LINING IN ANY D.I. PIPE FITTINGS. ANY PIPE OR FITTING WHICH IS DAMAGED OR WHICH HAS FLAWS OR IMPERFECTIONS WHICH, IN THE OPINION OF THE ENGINEER OR OWNER, RENDERS IT UNFIT FOR USE, SHALL NOT BE USED. ANY PIPE NOT SATISFACTORY FOR USE SHALL BE CLEARLY MARKED AND IMMEDIATELY REMOVED FROM THE JOB SITE, AND SHALL BE REPLACED AT THE CONTRACTOR'S EXPENSE.

6. WATER FOR FIRE FIGHTING SHALL BE MADE AVAILABLE FOR USE BY THE CONTRACTOR PRIOR TO COMBUSTIBLES BEING BROUGHT ON SITE.

7. ALL UTILITY AND STORM DRAIN TRENCHES LOCATED UNDER AREAS TO RECEIVE PAVING SHALL BE COMPLETELY BACK FILLED IN ACCORDANCE WITH THE GOVERNING JURISDICTIONAL AGENCY'S SPECIFICATIONS. IN THE EVENT THAT THE CONTRACT DOCUMENTS AND THE JURISDICTIONAL AGENCY REQUIREMENTS ARE NOT IN AGREEMENT, THE MOST STRINGENT SHALL GOVERN.

8. UNDERGROUND LINES SHALL BE SURVEYED BY A STATE OF MN PROFESSIONAL LAND SURVEYOR PRIOR TO BACK FILLING.

9. CONTRACTOR SHALL PERFORM, AT HIS OWN EXPENSE, ANY AND ALL TESTS REQUIRED BY THE SPECIFICATIONS AND/OR ANY AGENCY HAVING JURISDICTION. THESE TESTS MAY INCLUDE, BUT MAY NOT BE LIMITED TO, INFILTRATION AND EXFILTRATION, TELEVISION INSPECTION AND A MANDREL TEST ON GRAVITY SEWER. A COPY OF THE TEST RESULTS SHALL BE PROVIDED TO THE UTILITY PROVIDER, OWNER AND JURISDICTIONAL AGENCY AS REQUIRED.

10. CONTRACTOR SHALL PROVIDE FOR A MINIMUM HORIZONTAL CLEARANCE OF 10' AND A VERTICAL CLEARANCE OF 18" BETWEEN WATER AND SANITARY SEWER MANHOLES AND LINES.

11. IF ANY EXISTING STRUCTURES TO REMAIN ARE DAMAGED DURING CONSTRUCTION IT SHALL BE THE CONTRACTORS RESPONSIBILITY TO REPAIR AND/OR REPLACE THE EXISTING STRUCTURE AS NECESSARY TO RETURN IT TO EXISTING CONDITIONS OR BETTER.

12. ALL STORM PIPE ENTERING STRUCTURES SHALL BE GROUTED TO ASSURE CONNECTION AT STRUCTURE IS WATERTIGHT UNLESS OTHERWISE STATED BY CITY AND STATE DESIGN STANDARDS AND SPECIFICATIONS.

13. UNLESS OTHERWISE STATED IN CITY AND STATE DESIGN STANDARDS AND SPECIFICATIONS, ALL STORM SEWER MANHOLES IN PAVED AREAS SHALL BE FLUSH WITH PAVEMENT, AND SHALL HAVE TRAFFIC BEARING RING & COVERS. MANHOLES IN UNPAVED AREAS SHALL BE 6" ABOVE FINISH GRADE. LIDS SHALL BE LABELED "STORM SEWER". EXISTING CASTINGS AND STRUCTURES WITHIN PROJECT LIMITS SHALL BE ADJUSTED TO MEET THESE CONDITIONS AND THE PROPOSED FINISHED GRADE.

14. TOPOGRAPHIC INFORMATION IS TAKEN FROM A TOPOGRAPHIC SURVEY BY LAND SURVEYORS. IF THE CONTRACTOR DOES NOT ACCEPT EXISTING TOPOGRAPHY AS SHOWN ON THE PLANS, WITHOUT EXCEPTION, THEN THE CONTRACTOR SHALL SUPPLY, AT THEIR EXPENSE, A TOPOGRAPHIC SURVEY BY A REGISTERED LAND SURVEYOR TO THE OWNER FOR REVIEW.

15. CONSTRUCTION SHALL COMPLY WITH ALL APPLICABLE GOVERNING CODES AND BE CONSTRUCTED TO SAME.

16. ALL STORM STRUCTURES SHALL HAVE A SMOOTH UNIFORM POURED MORTAR FROM INVERT IN TO INVERT OUT.

17. ROOF DRAINS SHALL BE CONNECTED TO STORM SEWER BY PREFABRICATED WYES OR AT STORM STRUCTURES. ROOF DRAINS AND TRUCK WELL DRAIN SHALL RUN AT A MINIMUM 1% SLOPE, UNLESS NOTED OTHERWISE, AND TIE IN AT THE CENTERLINE OF THE STORM MAIN.

18. ALL ROOF AND SANITARY SEWER DRAINS SHALL BE INSULATED IF 7' OF COVER CANNOT BE PROVIDED.

19. THE CONTRACTOR SHALL PROTECT EXISTING UNDERGROUND UTILITIES AND APPURTENANCES THAT ARE TO REMAIN FROM DAMAGE DURING CONSTRUCTION OPERATIONS.

20. THE LOCATION OF EXISTING UTILITIES, STORM DRAINAGE STRUCTURES AND OTHER ABOVE AND BELOW-GRADE IMPROVEMENTS ARE APPROXIMATE AS SHOWN. IT IS THE CONTRACTOR'S RESPONSIBILITY TO DETERMINE THE EXACT LOCATION, SIZE AND INVERT ELEVATIONS OF EACH PRIOR TO THE START OF CONSTRUCTION.

21. A MINIMUM OF 5' SEPARATION IS REQUIRED BETWEEN UTILITIES AND TREES UNLESS A ROOT BARRIER IS UTILIZED.

22. GAS, PHONE AND ELECTRIC SERVICES SHOWN FOR INFORMATIONAL PURPOSES ONLY. DRY UTILITY COMPANIES MAY ALTER THE DESIGN LAYOUT DURING THEIR REVIEW. CONTRACTOR TO COORDINATE FINAL DESIGN AND INSTALLATION WITH UTILITY COMPANIES.

23. COORDINATE UTILITY INSTALLATION WITH IRRIGATION DESIGN AND INSTALLATION.

24. ALL DIMENSIONS ARE TO FLOW LINE OF CURB UNLESS OTHERWISE NOTED. PERIMETER WALL DIMENSIONS ARE TO INSIDE WALL FACE. REFERENCE ARCHITECTURAL PLANS FOR EXACT WALL WIDTH AND SPECIFICATIONS.

25. REFERENCE ARCHITECTURAL PLANS (BY OTHERS). FOR EXACT BUILDING DIMENSIONS, AND MATERIALS SPECIFICATIONS.

26. REFERENCE M.E.P. PLANS (BY OTHERS) FOR MECHANICAL EQUIPMENT DIMENSIONS AND SPECIFICATIONS.

27. CONTRACTOR SHALL REFERENCE STRUCTURAL PLANS (BY OTHERS) FOR MECHANICAL EQUIPMENT DIMENSIONS AND PAD PREPARATION SPECIFICATIONS.

28. CONTRACTOR SHALL REFERENCE M.E.P PLANS (BY OTHERS) FOR LIGHT POLE WIRING.

ISSUED FOR PERMIT - NOT FOR CONSTRUCTION

No.	REVISIONS	DATE	BY

Kimley»Horn
2021 KIMLEY-HORN AND ASSOCIATES, INC.
767 EUSTIS STREET, SUITE 100, ST. PAUL, MN 55114
PHONE: 651-645-4197
WWW.KIMLEY-HORN.COM

I HEREBY CERTIFY THAT THIS PLAN, SPECIFICATION OR REPORT WAS PREPARED BY ME OR UNDER MY DIRECT SUPERVISION AND THAT I AM A DULY LICENSED PROFESSIONAL ENGINEER UNDER THE LAWS OF THE STATE OF MINNESOTA.

WILLIAM D. MATZEK, P.E.
DATE: 12/20/2021 MN LIC. NO. 45790

KHA PROJECT	160284002
DATE	12/20/2021
SCALE	AS SHOWN
DESIGNED BY	ACL
DRAWN BY	AJW
CHECKED BY	WDM

GENERAL NOTES

MISTER CAR WASH - MINNETONKA, MN

PREPARED FOR
MISTER CAR WASH

MINNETONKA MN

SHEET NUMBER
C100

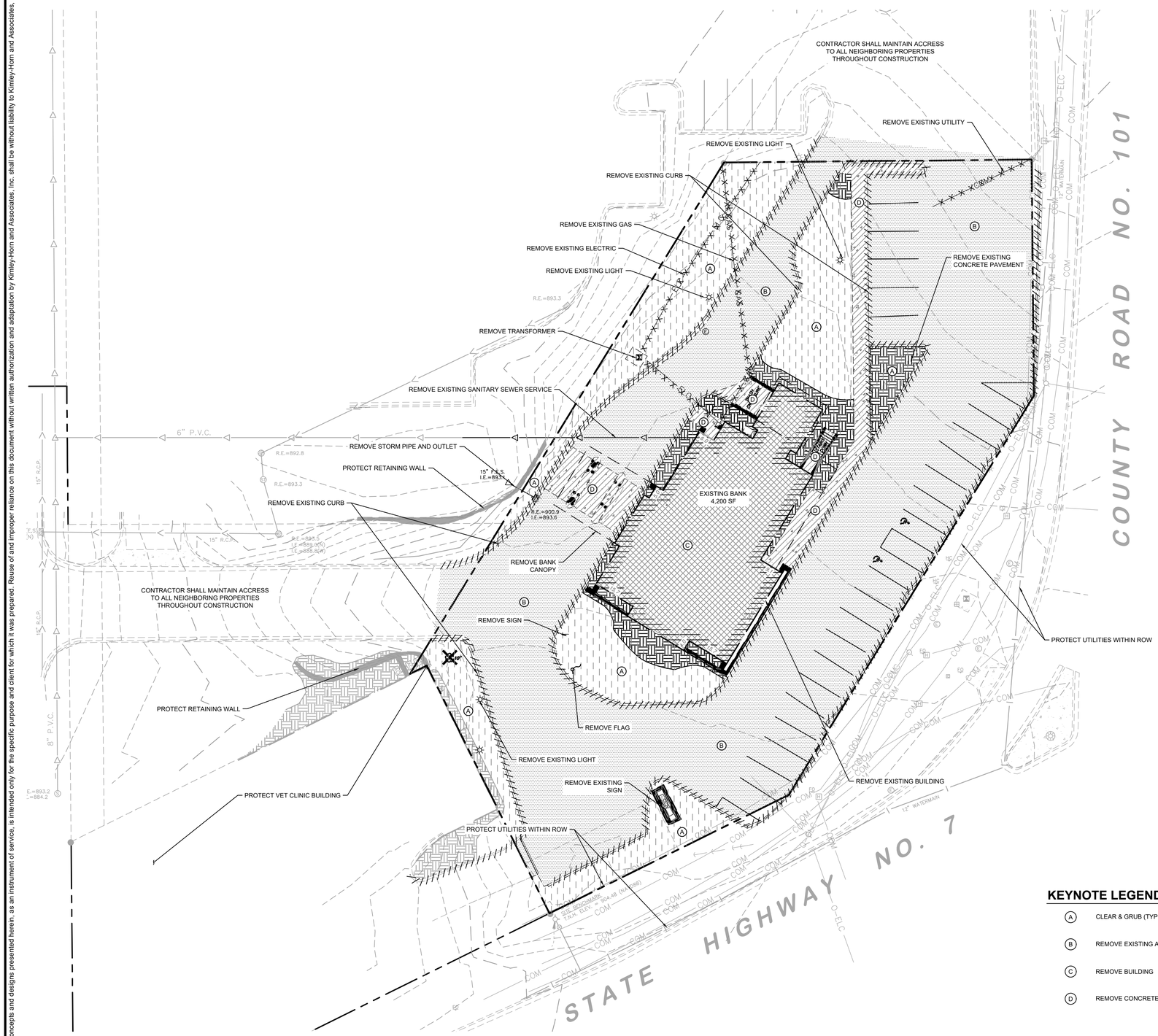

DEMOLITION PLAN NOTES

1. THE CONTRACTOR IS RESPONSIBLE FOR THE DEMOLITION, REMOVAL, AND DISPOSAL (IN A LOCATION APPROVED BY ALL GOVERNING AUTHORITIES) ALL STRUCTURES, PADS, WALLS, FLUMES, FOUNDATIONS, PARKING, DRIVES, DRAINAGE STRUCTURES, UTILITIES, ETC. SUCH THAT THE IMPROVEMENTS ON THE PLANS CAN BE CONSTRUCTED. ALL FACILITIES TO BE REMOVED SHALL BE UNDERCUT TO SUITABLE MATERIAL AND BROUGHT TO GRADE WITH SUITABLE COMPACTED FILL MATERIAL PER THE PROJECT DOCUMENTS.
2. THE CONTRACTOR IS RESPONSIBLE FOR REMOVING ALL DEBRIS FROM THE SITE AND DISPOSING THE DEBRIS IN A LAWFUL MANNER. THE CONTRACTOR IS RESPONSIBLE FOR OBTAINING ALL PERMITS REQUIRED FOR DEMOLITION AND DISPOSAL. CONTRACTOR SHALL PROVIDE COPIES OF THE PERMIT AND RECEIPTS OF DISPOSAL OF MATERIALS TO THE OWNER AND OWNERS REPRESENTATIVE.
3. THE CONTRACTOR SHALL MAINTAIN ALL UTILITY SERVICES TO ADJACENT PROPERTIES AT ALL TIMES. UTILITY SERVICES SHALL NOT BE INTERRUPTED WITHOUT APPROVAL FROM THE CONSTRUCTION MANAGER AND COORDINATION WITH THE ADJACENT PROPERTIES AND/OR THE CITY.
4. THE CONTRACTOR SHALL COORDINATE WITH RESPECTIVE UTILITY COMPANIES PRIOR TO THE REMOVAL AND/OR RELOCATION OF UTILITIES. THE CONTRACTOR SHALL COORDINATE WITH THE UTILITY COMPANY CONCERNING PORTIONS OF WORK WHICH MAY BE PERFORMED BY THE UTILITY COMPANY'S FORCES AND ANY FEES WHICH ARE TO BE PAID TO THE UTILITY COMPANY FOR THEIR SERVICES. THE CONTRACTOR IS RESPONSIBLE FOR PAYING ALL FEES AND CHARGES.
5. THE LOCATIONS OF ALL EXISTING UTILITIES SHOWN ON THE PLAN HAVE BEEN DETERMINED FROM THE BEST INFORMATION AVAILABLE AND ARE GIVEN FOR THE CONVENIENCE OF THE CONTRACTOR. THE ENGINEER ASSUMES NO RESPONSIBILITY FOR THEIR ACCURACY. PRIOR TO THE START OF ANY DEMOLITION ACTIVITY, THE CONTRACTOR SHALL NOTIFY THE UTILITY COMPANIES FOR LOCATIONS OF EXISTING UTILITIES WITHIN ALL AREAS OF PROPOSED WORK.
6. ALL EXISTING SEWERS, PIPING AND UTILITIES SHOWN ARE NOT TO BE INTERPRETED AS THE EXACT LOCATION, OR AS ANY OBSTACLES THAT MAY OCCUR ON THE SITE. VERIFY EXISTING CONDITIONS AND PROCEED WITH CAUTION AROUND ANY ANTICIPATED FEATURES. GIVE NOTICE TO ALL UTILITY COMPANIES REGARDING DESTRUCTION AND REMOVAL OF ALL SERVICE LINES AND CAP ALL LINES BEFORE PRECEDING WITH THE WORK.
7. ELECTRICAL, TELEPHONE, CABLE, WATER, FIBER OPTIC, AND/OR GAS LINES NEEDING TO BE REMOVED OR RELOCATED SHALL BE COORDINATED WITH THE AFFECTED UTILITY COMPANY. ADEQUATE TIME SHALL BE PROVIDED FOR RELOCATION AND CLOSE COORDINATION WITH THE UTILITY COMPANY IS NECESSARY TO PROVIDE A SMOOTH TRANSITION IN UTILITY SERVICE. CONTRACTOR SHALL PAY CLOSE ATTENTION TO EXISTING UTILITIES WITHIN ANY ROAD RIGHT-OF-WAY DURING CONSTRUCTION.
8. CONTRACTOR MUST PROTECT THE PUBLIC AT ALL TIMES WITH FENCING, BARRICADES, ENCLOSURES, ETC. (AND OTHER APPROPRIATE BEST MANAGEMENT PRACTICES) AS APPROVED BY THE CONSTRUCTION MANAGER. MAINTENANCE OF TRAFFIC CONTROL SHALL BE COORDINATED IN ACCORDANCE WITH MINNETONKA, HENNEPIN COUNTY AND MN/DOT.
9. CONTRACTOR SHALL MAINTAIN ACCESS TO ALL ADJACENT PROPERTIES DURING CONSTRUCTION, AND SHALL NOTIFY ALL PROPERTIES IF ACCESS WILL BE INTERRUPTED OR ALTERED AT ANY TIME DURING CONSTRUCTION.
10. PRIOR TO DEMOLITION OCCURRING, ALL EROSION CONTROL DEVICES ARE TO BE INSTALLED.
11. CONTRACTOR MAY LIMIT SAW-CUT AND PAVEMENT REMOVAL TO ONLY THOSE AREAS WHERE IT IS REQUIRED AS SHOWN ON THESE CONSTRUCTION PLANS BUT IF ANY DAMAGE IS INCURRED ON ANY OF THE SURROUNDING PAVEMENT, ETC. THE CONTRACTOR SHALL BE RESPONSIBLE FOR ITS REMOVAL AND REPAIR.
12. THE CONTRACTOR SHALL COORDINATE WATER MAIN WORK WITH THE FIRE DEPT. AND THE CITY WATER DEPARTMENT TO PLAN PROPOSED IMPROVEMENTS AND TO ENSURE ADEQUATE FIRE PROTECTION IS CONSTANTLY AVAILABLE TO THE SITE THROUGHOUT THIS SPECIFIC WORK AND THROUGH ALL PHASES OF CONSTRUCTION. CONTRACTOR WILL BE RESPONSIBLE FOR ARRANGING/PROVIDING ANY REQUIRED WATER MAIN SHUT OFFS WITH THE CITY OF MINNETONKA DURING CONSTRUCTION. ANY COSTS ASSOCIATED WITH WATER MAIN SHUT OFFS WILL BE THE RESPONSIBILITY OF THE CONTRACTOR AND NO EXTRA COMPENSATION WILL BE PROVIDED.
13. REFER TO SURVEY FOR ALL EXISTING INVERT AND RIM ELEVATIONS.
14. ALL UTILITIES SHOWN ARE EXISTING UTILITIES.
15. IN THE EVENT A WELL IS FOUND, THE CONTRACTOR SHALL CONTACT THE ENGINEER AND OWNER IMMEDIATELY. ALL WELLS SHALL BE SEALED BY A LICENSED WELL CONTRACTOR IN ACCORDANCE WITH ALL STATE OF MN REQUIREMENTS.
16. IN THE EVENT THAT UNKNOWN CONTAINERS OR TANKS ARE ENCOUNTERED, THE CONTRACTOR SHALL CONTACT THE OWNER AND/OR OWNERS REPRESENTATIVE IMMEDIATELY. ALL CONTAINERS SHALL BE DISPOSED OF AT A PERMITTED LANDFILL PER THE PROJECT DOCUMENTS.
17. CONTRACTOR SHALL NOTIFY THE ENGINEER IF ANY EXISTING DRAINTILE IS ENCOUNTERED ON SITE. NO ACTIVE DRAINTILE SHALL BE REMOVED WITHOUT APPROVAL FROM THE ENGINEER.

LEGEND

- PROPERTY LINE
- REMOVE BITUMINOUS SURFACE
- REMOVE CONCRETE SURFACE
- REMOVE BUILDING
- CLEARING & GRUBBING
- FULL DEPTH SAWCUT
- REMOVE TREE
- REMOVE CONCRETE CURB & GUTTER
- REMOVE UTILITY LINES
- FILL & ABANDON UTILITY LINES
- LIMITS OF CONSTRUCTION
- O—ELC — EXISTING OVERHEAD POWER LINE
- EXISTING CHAINLINK FENCE
- EXISTING J-BARRIER
- EXISTING RETAINING WALL
- EXISTING SANITARY SEWER
- EXISTING STORM SEWER
- EXISTING WATERMAIN
- GAS — EXISTING GAS MAIN
- TEL — EXISTING UNDERGROUND TELEPHONE
- CTV — EXISTING UNDERGROUND CABLE
- 928 — EXISTING CONTOUR
- EXISTING CURB & GUTTER
- EXISTING SIGN
- EXISTING FLARED END SECTION
- EXISTING STORM MANHOLE
- EXISTING STORM CATCHBASIN
- GAS METER — EXISTING GAS METER
- EXISTING POST INDICATOR VALVE
- EXISTING WELL
- EXISTING AUTOMATIC SPRINKLER
- EXISTING ROOF DRAIN
- EXISTING GATE VALVE
- EXISTING HYDRANT
- EXISTING METAL COVER
- E — EXISTING ELECTRICAL METER
- EXISTING AIR CONDITIONER
- EXISTING TELEPHONE MANHOLE
- EXISTING CABLE BOX
- EXISTING GUY WIRE
- EXISTING POWER POLE
- EXISTING LIGHT POLE
- EXISTING TREE
- EXISTING TREE LINE

KEYNOTE LEGEND

- (A) CLEAR & GRUB (TYP.)
- (B) REMOVE EXISTING ASPHALT PAVEMENT (TYP.)
- (C) REMOVE BUILDING
- (D) REMOVE CONCRETE PAVEMENT (TYP.)

NORTH

GRAPHIC SCALE IN FEET
0 10 20 40

No.	REVISIONS	DATE	BY

Kimley»Horn
© 2021 KIMLEY-HORN AND ASSOCIATES, INC.
767 EUSTIS STREET, SUITE 100, ST. PAUL, MN 55114
PHONE: 651-645-4197
WWW.KIMLEY-HORN.COM

I HEREBY CERTIFY THAT THIS PLAN, SPECIFICATION OR REPORT WAS PREPARED BY ME OR UNDER MY DIRECT SUPERVISION AND THAT I AM A LICENSED PROFESSIONAL ENGINEER UNDER THE LAWS OF THE STATE OF MINNESOTA.

WILLIAM D. MATZEK, P.E.
DATE: 12/20/2021 MN LIC. NO. 45790

KHA PROJECT 160284002	
DATE	12/20/2021
SCALE	AS SHOWN
DESIGNED BY	ACL
DRAWN BY	AJW
CHECKED BY	WDM

DEMO PLAN

ISSUED FOR PERMIT - NOT FOR CONSTRUCTION

MISTER CAR WASH - MINNETONKA, MN

PREPARED FOR
MISTER CAR WASH

MINNETONKA MN

SHEET NUMBER
C200

K:\TWC_LDEV\mister car wash\minnetonka, mn\3 Design\CAD\plansheets\C2-DEMO PLAN.dwg December 20, 2021 - 5:58pm
This document, together with the concepts and designs presented herein, as an instrument of service, is intended only for the specific purpose and client for which it was prepared. Reuse of and improper reliance on this document without written authorization and adaptation by Kimley-Horn and Associates, Inc. shall be without liability to Kimley-Horn and Associates, Inc.

K:\TWC_LDEV\mister car wash\minnetonka, mn\3 Design\CAD\plansheets\C3-EROS PH1 PLAN.dwg December 20, 2021 - 5:58pm
This document, together with the concepts and designs presented herein, as an instrument of service, is intended only for the specific purpose and client for which it was prepared. Reuse of and improper reliance on this document without written authorization and adaptation by Kimley-Horn and Associates, Inc. shall be without liability to Kimley-Horn and Associates, Inc.

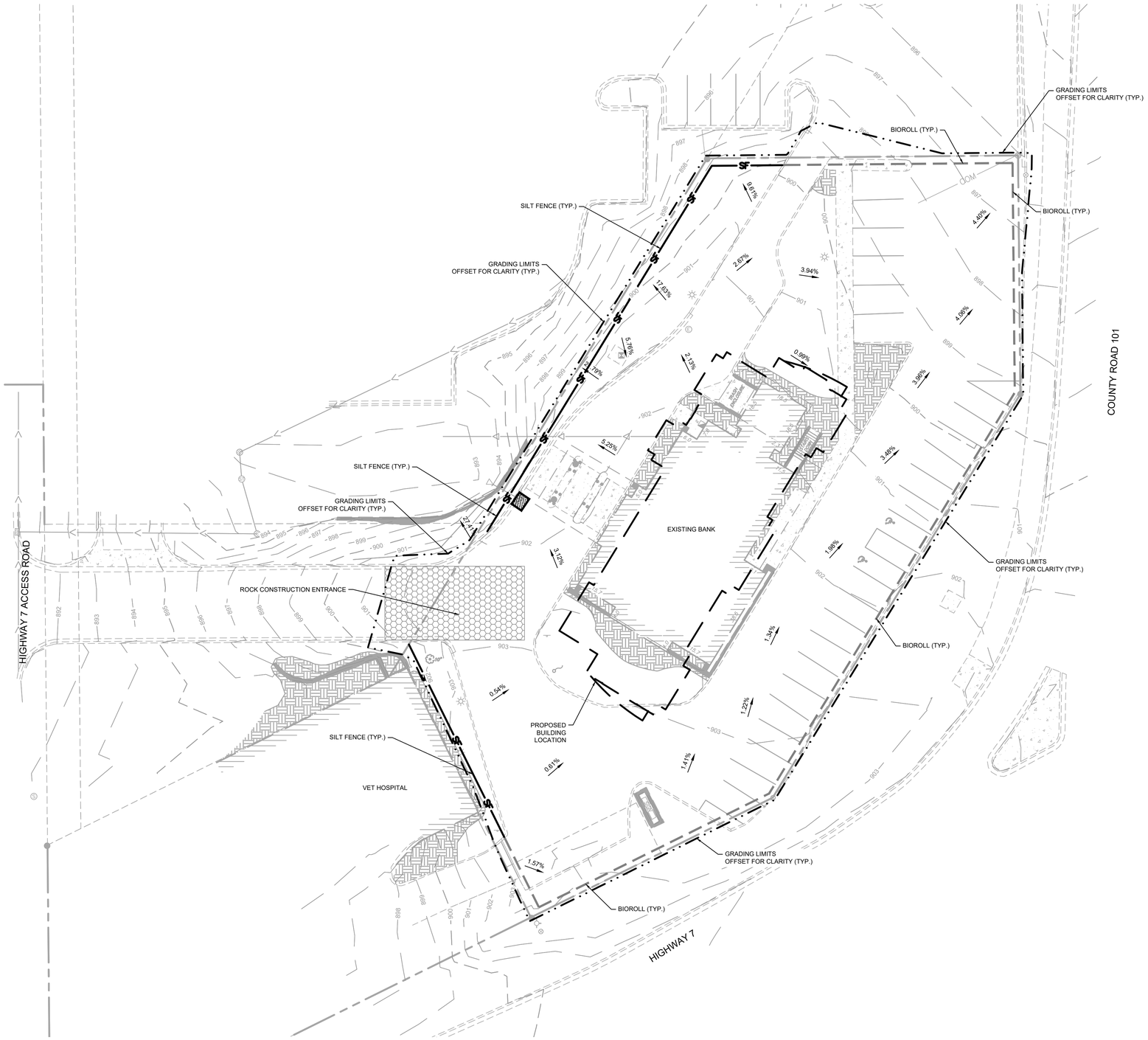

LEGEND

- ROCK ENTRANCE
- INLET PROTECTION
- SILT FENCE
- GRADING LIMITS
- BIOROLL

EROSION CONTROL PLAN NOTES

1. ALL PERIMETER SILT FENCE AND ROCK CONSTRUCTION ENTRANCES SHALL BE INSTALLED PRIOR TO CONSTRUCTION.
2. THE CONTRACTOR SHALL CONSTRUCT DRAINAGE BASINS PRIOR TO SITE GRADING.
3. THE CONTRACTOR SHALL INSTALL CATCH BASIN EROSION CONTROL MEASURES.
4. WITHIN TWO WEEKS (14 DAYS) OF SITE GRADING, ALL DISTURBED AREAS SHALL BE STABILIZED WITH SEED, SOD, OR ROCK BASE. REFER TO LANDSCAPE PLANS FOR MATERIALS.
5. ALL EROSION CONTROL MEASURES SHALL BE INSTALLED AND MAINTAINED IN ACCORDANCE WITH CITY, STATE, AND WATERSHED DISTRICT PERMITS.
6. THE CONTRACTOR SHALL MAINTAIN ALL EROSION CONTROL MEASURES, INCLUDING THE REMOVAL OF SILT IN FRONT OF SILT FENCES DURING THE DURATION OF THE CONSTRUCTION.
7. ANY EXCESS SEDIMENT IN PROPOSED BASINS SHALL BE REMOVED BY THE CONTRACTOR.
8. REMOVAL ALL EROSION CONTROL MEASURES AFTER VEGETATION IS ESTABLISHED.
9. THE CONTRACTOR SHALL REMOVE ALL SOILS AND SEDIMENT TRACKED ONTO EXISTING STREETS AND PAVED AREAS AND SHALL SWEEP ADJACENT STREETS AS NECESSARY IN ACCORDANCE WITH CITY REQUIREMENTS.
10. IF BLOWING DUST BECOMES A NUISANCE, THE CONTRACTOR SHALL APPLY WATER FROM A TANK TRUCK TO ALL CONSTRUCTION AREAS.
11. CONSTRUCTION SHOULD INCLUDE MINIMIZATION OF THE DISTURBANCE INTENSITY AND DURATION, INCLUDING PHASING OF DISTURBANCE TO MINIMIZE QUANTITY OF DISTURBED AREA AT ANY ONE TIME.
12. SOIL SURFACES COMPACTED DURING CONSTRUCTION AND REMAINING PERVIOUS UPON COMPLETION OF CONSTRUCTION MUST BE DECOMPACTED TO ACHIEVE:
    - 12.1. A SOIL COMPACTION TESTING PRESSURE OF LESS THAN 1,400 KILOPASCALS OR 200 POUNDS PER SQUARE INCH IN THE UPPER 12 INCHES OF SOIL OR
    - 12.2. A BULK DENSITY OF LESS THAN 1.4 GRAMS PER CUBIC CENTIMETER OR 87 POUNDS PER CUBIC FOOT IN THE UPPER 12 INCHES OF SOIL.

    IN ADDITION, UTILITIES, TREE ROOTS, AND OTHER EXISTING VEGETATION MUST BE PROTECTED UNTIL FINAL REVEGETATION OR OTHER STABILIZATION OF THE SITE.
13. PROTECTION OF NATURAL TOPOGRAPHY AND SOILS CONDITIONS, INCLUDING RETENTION ONSITE OF NATIVE TOPSOIL TO THE GREATEST EXTENT POSSIBLE.
14. STAKING OFF AND MARKING OF PROPOSED INFILTRATION FACILITIES TO PREVENT SOIL COMPACTION BY HEAVY EQUIPMENT, STOCKPILING OF MATERIALS, AND TRAFFIC. IF INFILTRATION FACILITIES ARE IN PLACE DURING CONSTRUCTION ACTIVITIES, BEST PRACTICES MUST BE DEPLOYED TO PREVENT SEDIMENT AND OTHER MATERIAL FROM ENTERING THE PRACTICE. INFILTRATION FACILITIES MUST NOT BE EXCAVATED TO WITHIN 3 FEET FINAL GRADE UNTIL THE CONTRIBUTING DRAINAGE AREA HAS BEEN CONSTRUCTED AND FULLY STABILIZED. ANY ACCUMULATED SEDIMENT IN AN INFILTRATION FACILITY MUST BE REMOVED IN MANNER THAT PREVENTS COMPACTION OF THE FACILITY BOTTOM.

SEQUENCE OF CONSTRUCTION:

UPON IMPLEMENTATION AND INSTALLATION OF THE FOLLOWING AREAS: TRAILER, PARKING, LAYDOWN, PORTA-POTTY, WHEEL WASH, CONCRETE WASHOUT, FUEL AND MATERIAL STORAGE CONTAINERS, SOLID WASTE CONTAINERS, ETC., IMMEDIATELY DENOTE THEM ON THE SITE MAPS AND NOTE ANY CHANGES IN LOCATION AS THEY OCCUR THROUGHOUT THE CONSTRUCTION PROCESS.

BMP AND EROSION CONTROL INSTALLATION SEQUENCE SHALL BE AS FOLLOWS:

1. INSTALL INLET PROTECTION AT EXISTING STORMWATER CULVERTS.
2. CONSTRUCT STABILIZED CONSTRUCTION ENTRANCE (1), CONCRETE WASHOUT PIT (1) AND INSTALL SILT FENCE.
3. PREPARE TEMPORARY PARKING AND STORAGE AREA.
4. CONSTRUCT AND STABILIZE DIVERSIONS AND TEMPORARY SEDIMENT TRAPS.
5. PERFORM CLEARING AND GRUBBING OF THE SITE. PERFORM MASS GRADING. ROUGH GRADE TO ESTABLISH PROPOSED DRAINAGE PATTERNS.
6. START CONSTRUCTION OF THE BUILDING PAD AND STRUCTURES.
7. TEMPORARILY SEED WITH PURE LIVE SEED, THROUGHOUT CONSTRUCTION, DISTURBED AREAS THAT WILL BE INACTIVE FOR 14 DAYS OR MORE OR AS REQUIRED BY NPDES AND/OR CITY OF MINNETONKA GRADING PERMIT.

DEVELOPER/OWNER:
CAR WASH PARTNERS, INC.
222 E 5TH STREET
TUSCON, AZ 85705

SITE OPERATOR/GENERAL CONTRACTOR:
T.B.D.

SUPERINTENDENT:

NORTH

GRAPHIC SCALE IN FEET
0 10 20 40

No.	REVISIONS	DATE	BY

Kimley»Horn
2021 KIMLEY-HORN AND ASSOCIATES, INC.
767 EUSTIS STREET, SUITE 100, ST. PAUL, MN 55114
PHONE: 651-645-4197
WWW.KIMLEY-HORN.COM

I HEREBY CERTIFY THAT THIS PLAN, SPECIFICATION OR REPORT WAS PREPARED BY ME OR UNDER MY DIRECT SUPERVISION AND THAT I AM A DULY LICENSED PROFESSIONAL ENGINEER UNDER THE LAWS OF THE STATE OF MINNESOTA.

WILLIAM D. MATZEK, P.E.
DATE: 12/20/2021 MN LIC. NO. 45790

KHA PROJECT	160284002
DATE	12/20/2021
SCALE	AS SHOWN
DESIGNED BY	ACL
DRAWN BY	AJW
CHECKED BY	WDM

ISSUED FOR PERMIT - NOT FOR CONSTRUCTION

EROSION AND SEDIMENT CONTROL PLAN - PHASE 1

MISTER CAR WASH - MINNETONKA, MN
PREPARED FOR
MISTER CAR WASH
MINNETONKA MN

SHEET NUMBER
C300

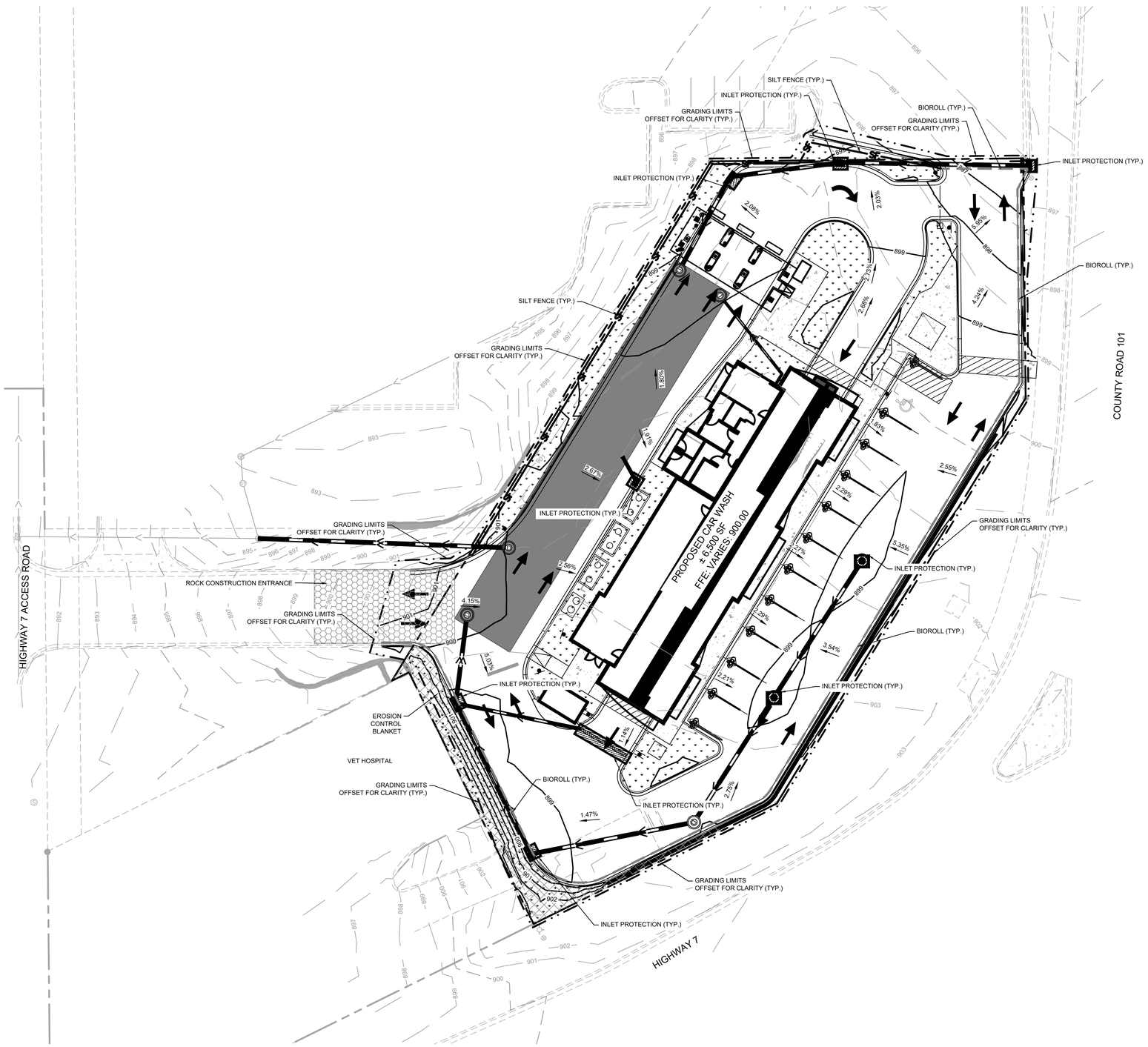

LEGEND

- ROCK ENTRANCE
- EROSION CONTROL BLANKET
- INLET PROTECTION
- SILT FENCE
- GRADING LIMITS
- BIOROLL

EROSION CONTROL PLAN NOTES

1. ALL PERIMETER SILT FENCE AND ROCK CONSTRUCTION ENTRANCES SHALL BE INSTALLED PRIOR TO CONSTRUCTION.
2. THE CONTRACTOR SHALL CONSTRUCT DRAINAGE BASINS PRIOR TO SITE GRADING.
3. THE CONTRACTOR SHALL INSTALL CATCH BASIN EROSION CONTROL MEASURES.
4. WITHIN TWO WEEKS (14 DAYS) OF SITE GRADING, ALL DISTURBED AREAS SHALL BE STABILIZED WITH SEED, SOD, OR ROCK BASE. REFER TO LANDSCAPE PLANS FOR MATERIALS.
5. ALL EROSION CONTROL MEASURES SHALL BE INSTALLED AND MAINTAINED IN ACCORDANCE WITH CITY, STATE, AND WATERSHED DISTRICT PERMITS.
6. THE CONTRACTOR SHALL MAINTAIN ALL EROSION CONTROL MEASURES, INCLUDING THE REMOVAL OF SILT IN FRONT OF SILT FENCES DURING THE DURATION OF THE CONSTRUCTION.
7. ANY EXCESS SEDIMENT IN PROPOSED BASINS SHALL BE REMOVED BY THE CONTRACTOR.
8. REMOVAL ALL EROSION CONTROL MEASURES AFTER VEGETATION IS ESTABLISHED.
9. THE CONTRACTOR SHALL REMOVE ALL SOILS AND SEDIMENT TRACKED ONTO EXISTING STREETS AND PAVED AREAS AND SHALL SWEEP ADJACENT STREETS AS NECESSARY IN ACCORDANCE WITH CITY REQUIREMENTS.
10. IF BLOWING DUST BECOMES A NUISANCE, THE CONTRACTOR SHALL APPLY WATER FROM A TANK TRUCK TO ALL CONSTRUCTION AREAS.
11. CONSTRUCTION SHOULD INCLUDE MINIMIZATION OF THE DISTURBANCE INTENSITY AND DURATION, INCLUDING PHASING OF DISTURBANCE TO MINIMIZE QUANTITY OF DISTURBED AREA AT ANY ONE TIME.
12. SOIL SURFACES COMPACTED DURING CONSTRUCTION AND REMAINING PERVIOUS UPON COMPLETION OF CONSTRUCTION MUST BE DECOMPACTED TO ACHIEVE:
    - 12.1. A SOIL COMPACTION TESTING PRESSURE OF LESS THAN 1,400 KILOPASCALS OR 200 POUNDS PER SQUARE INCH IN THE UPPER 12 INCHES OF SOIL OR
    - 12.2. A BULK DENSITY OF LESS THAN 1.4 GRAMS PER CUBIC CENTIMETER OR 87 POUNDS PER CUBIC FOOT IN THE UPPER 12 INCHES OF SOIL.

    IN ADDITION, UTILITIES, TREE ROOTS, AND OTHER EXISTING VEGETATION MUST BE PROTECTED UNTIL FINAL REVEGETATION OR OTHER STABILIZATION OF THE SITE.
13. PROTECTION OF NATURAL TOPOGRAPHY AND SOILS CONDITIONS, INCLUDING RETENTION ONSITE OF NATIVE TOPSOIL TO THE GREATEST EXTENT POSSIBLE.
14. STAKING OFF AND MARKING OF PROPOSED INFILTRATION FACILITIES TO PREVENT SOIL COMPACTION BY HEAVY EQUIPMENT, STOCKPILING OF MATERIALS, AND TRAFFIC. IF INFILTRATION FACILITIES ARE IN PLACE DURING CONSTRUCTION ACTIVITIES, BEST PRACTICES MUST BE DEPLOYED TO PREVENT SEDIMENT AND OTHER MATERIAL FROM ENTERING THE PRACTICE. INFILTRATION FACILITIES MUST NOT BE EXCAVATED TO WITHIN 3 FEET FINAL GRADE UNTIL THE CONTRIBUTING DRAINAGE AREA HAS BEEN CONSTRUCTED AND FULLY STABILIZED. ANY ACCUMULATED SEDIMENT IN AN INFILTRATION FACILITY MUST BE REMOVED IN MANNER THAT PREVENTS COMPACTION OF THE FACILITY BOTTOM.
15.

SEQUENCE OF CONSTRUCTION:

UPON IMPLEMENTATION AND INSTALLATION OF THE FOLLOWING AREAS: TRAILER, PARKING, LAYDOWN, PORTA-POTTY, WHEEL WASH, CONCRETE WASHOUT, FUEL AND MATERIAL STORAGE CONTAINERS, SOLID WASTE CONTAINERS, ETC., IMMEDIATELY DENOTE THEM ON THE SITE MAPS AND NOTE ANY CHANGES IN LOCATION AS THEY OCCUR THROUGHOUT THE CONSTRUCTION PROCESS.

BMP AND EROSION CONTROL INSTALLATION SEQUENCE SHALL BE AS FOLLOWS:

1. TEMPORARILY SEED, THROUGHOUT CONSTRUCTION, DENUDED AREAS THAT WILL BE INACTIVE FOR 7 DAYS OR MORE.
2. INSTALL UTILITIES, UNDERDRAINS, STORM SEWERS, UNDERGROUND SYSTEM, CURBS AND GUTTERS.
3. INSTALL APPROPRIATE INLET PROTECTION AT ALL STORM SEWER STRUCTURES AS EACH INLET STRUCTURE IS INSTALLED.
4. PERMANENTLY STABILIZE AREAS TO BE VEGETATED AS THEY ARE BROUGHT TO FINAL GRADE.
5. PREPARE SITE FOR PAVING.
6. PAVE SITE AND INSTALL STRIPING.
7. INSTALL APPROPRIATE INLET PROTECTION DEVICES FOR PAVED AREAS AS WORK PROGRESSES.
8. COMPLETE GRADING AND INSTALLATION OF PERMANENT STABILIZATION OVER ALL AREAS.
9. OBTAIN CONCURRENCE WITH THE CIVIL ENGINEERING CONSULTANT THAT THE SITE HAS BEEN FULLY STABILIZED THEN:
   1. REMOVE ALL REMAINING TEMPORARY EROSION ADN SEDIMENT CONTROL DEVICES
   2. STABILIZE ANY AREAS DISTURBED BY THE REMOVAL OF BMPS.

DEVELOPER/OWNER:
CAR WASH PARTNERS, INC.
222 E 5TH STREET
TUSCON, AZ 85705

SITE OPERATOR/GENERAL CONTRACTOR:
T.B.D.

SUPERINTENDENT:

NORTH

GRAPHIC SCALE IN FEET
0 10 20 40

No.	REVISIONS	DATE	BY

Kimley»Horn
2021 KIMLEY-HORN AND ASSOCIATES, INC.
767 EUSTIS STREET, SUITE 100, ST. PAUL, MN 55114
PHONE: 651-645-4197
WWW.KIMLEY-HORN.COM

I HEREBY CERTIFY THAT THIS PLAN, SPECIFICATION OR REPORT WAS PREPARED BY ME OR UNDER MY DIRECT SUPERVISION AND THAT I AM A DULY LICENSED PROFESSIONAL ENGINEER UNDER THE LAWS OF THE STATE OF MINNESOTA.

WILLIAM D. MATZEK, P.E.
DATE: 12/20/2021 MN LIC. NO. 45790

KHA PROJECT	160284002
DATE	12/20/2021
SCALE	AS SHOWN
DESIGNED BY	ACL
DRAWN BY	AJW
CHECKED BY	WDM

ISSUED FOR PERMIT - NOT FOR CONSTRUCTION

EROSION AND SEDIMENT CONTROL PLAN - PHASE 2

MISTER CAR WASH - MINNETONKA, MN
PREPARED FOR
MISTER CAR WASH
MINNETONKA MN

SHEET NUMBER
C301

K:\TWC_LDEV\mister car wash\minnetonka, mn\3 Design\CAD\plansheets\C3-EROS PH2 PLAN.dwg December 20, 2021 - 5:58pm
This document, together with the concepts and designs presented herein, as an instrument of service, is intended only for the specific purpose and client for which it was prepared. Reuse of and improper reliance on this document without written authorization and adaptation by Kimley-Horn and Associates, Inc. shall be without liability to Kimley-Horn and Associates, Inc.

K:\TWC_LDEV\mister car wash\minnetonka, mn\3 Design\CAD\plansheets\C3-EROS DETAILS.dwg December 20, 2021 - 5:59pm

This document, together with the concepts and designs presented herein, as an instrument of service, is intended only for the specific purpose and client for which it was prepared. Reuse of and improper reliance on this document without written authorization and adaptation by Kimley-Horn and Associates, Inc. shall be without liability to Kimley-Horn and Associates, Inc.

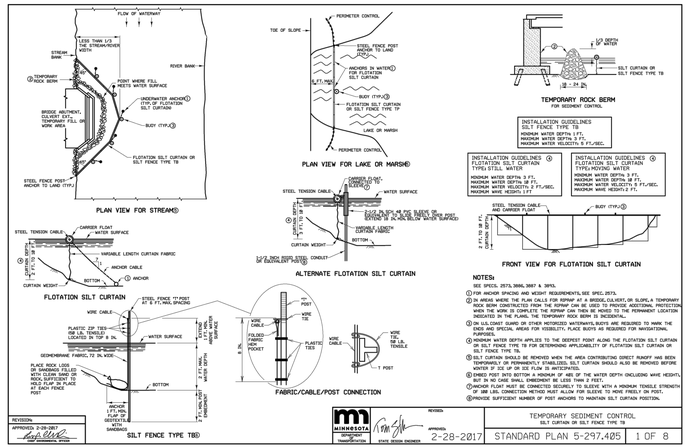

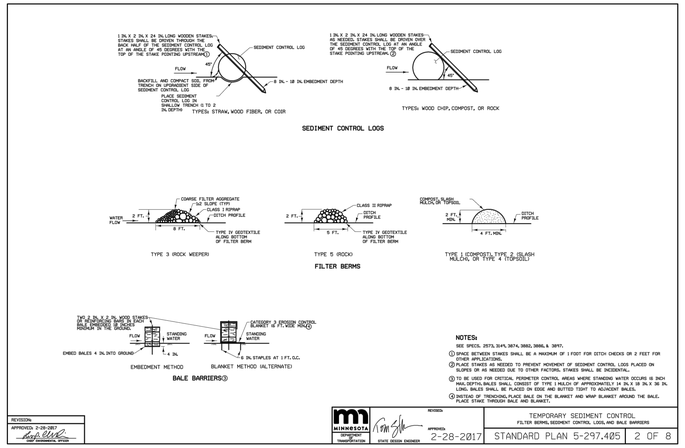

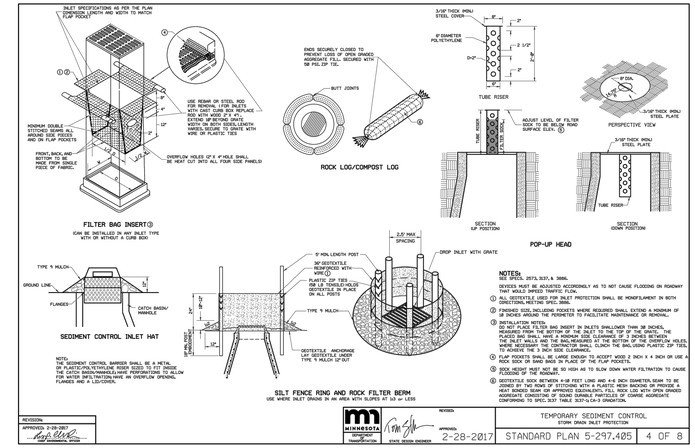

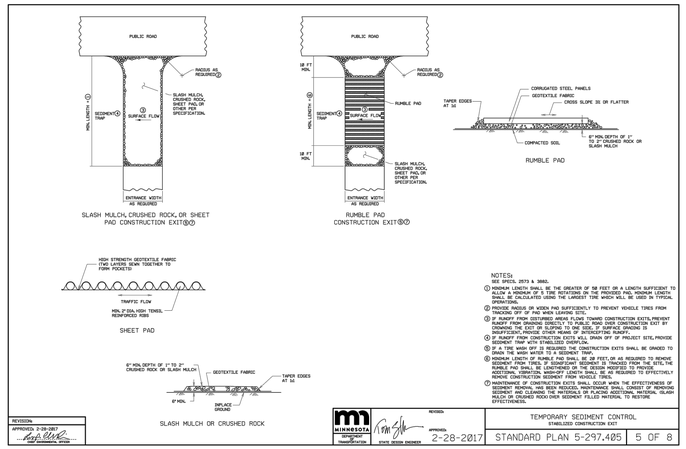

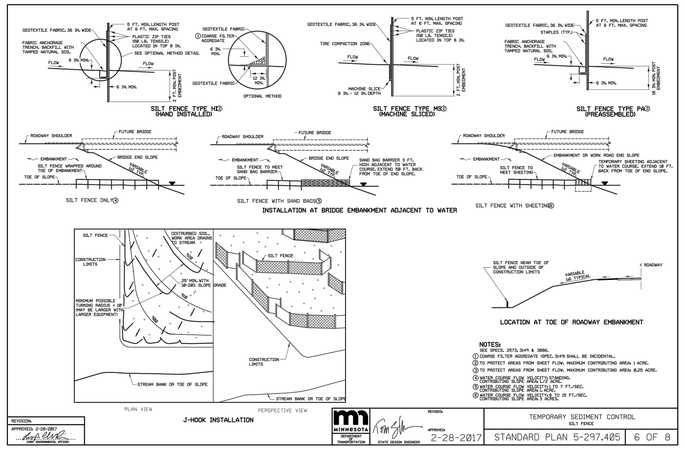

No.	REVISIONS	DATE	BY

Kimley»Horn
2021 KIMLEY-HORN AND ASSOCIATES, INC.
767 EUSTIS STREET, SUITE 100, ST. PAUL, MN 55114
PHONE: 651-645-4197
WWW.KIMLEY-HORN.COM

I HEREBY CERTIFY THAT THIS PLAN, SPECIFICATION OR REPORT WAS PREPARED BY ME OR UNDER MY DIRECT SUPERVISION AND THAT I AM A DULY LICENSED PROFESSIONAL ENGINEER UNDER THE LAWS OF THE STATE OF MINNESOTA.

WILLIAM D. MATZEK, P.E.
DATE: 12/20/2021 MN LIC. NO. 45790

KHA PROJECT	160284002
DATE	12/20/2021
SCALE	AS SHOWN
DESIGNED BY	ACL
DRAWN BY	AJW
CHECKED BY	WDM

EROSION AND SEDIMENT CONTROL DETAILS

ISSUED FOR PERMIT - NOT FOR CONSTRUCTION

MISTER CAR WASH - MINNETONKA, MN

PREPARED FOR
MISTER CAR WASH

MINNETONKA MN

SHEET NUMBER
C302

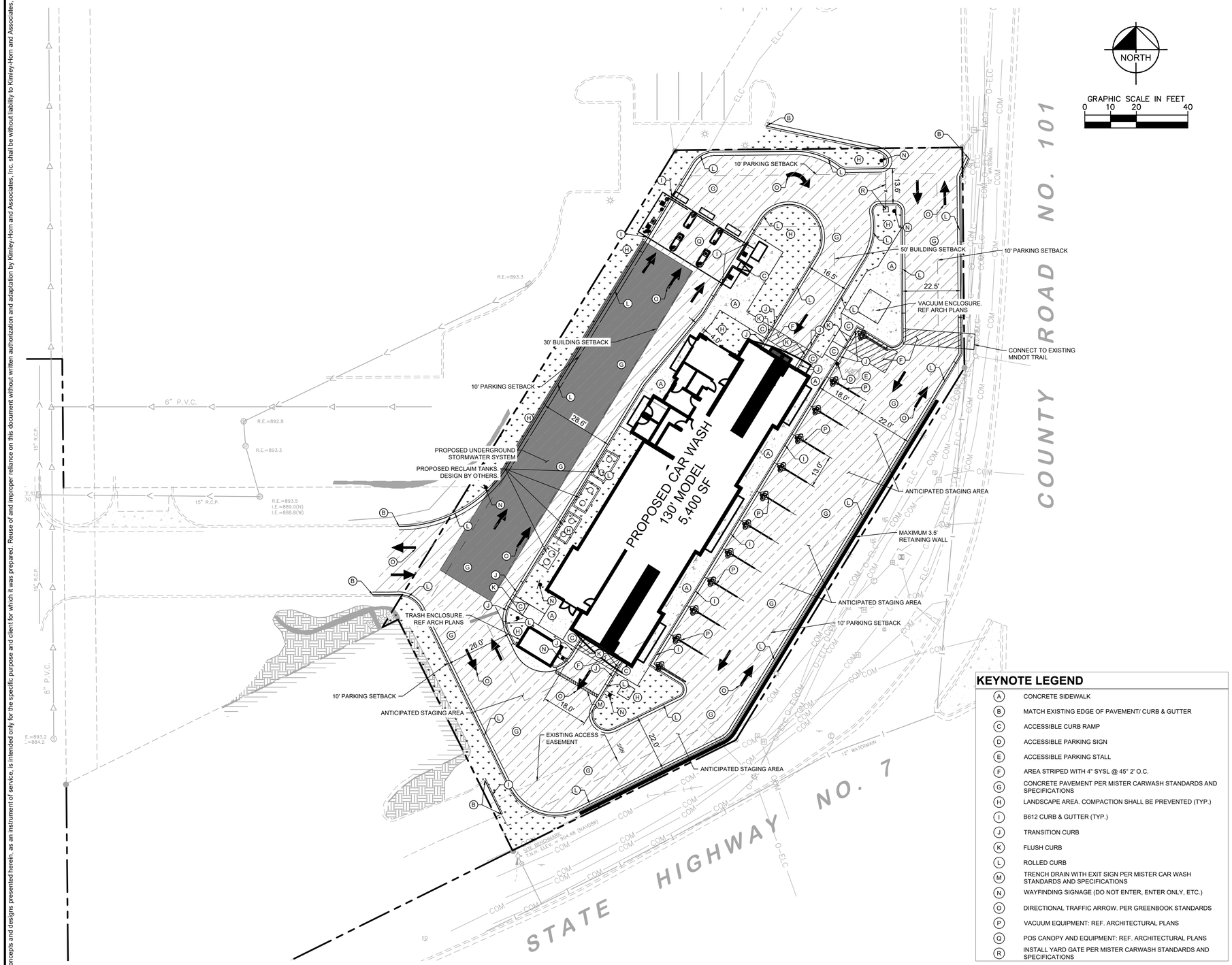

LEGEND

- PROPERTY LINE
- PROPOSED FENCE
- SETBACK LINE
- PROPOSED CURB AND GUTTER
- PROPOSED CONCRETE PAVEMENT
- PROPOSED CONCRETE SIDEWALK
- LANDSCAPE AREA. COMPACTION SHALL BE PREVENTED (TYP.)

PROPERTY SUMMARY

ROGERS, MN CAR WASH	
TOTAL PROPERTY AREA	0.83 AC
ZONING SUMMARY	
EXISTING ZONING	B-2 LIMITED BUSINESS DISTRICT
PROPOSED ZONING	B-2 LIMITED BUSINESS DISTRICT
PARKING SETBACKS	HWY 101 = 10' HWY 7 = 10' SOUTHWEST = 10' NORTHWEST = 10'
BUILDING SETBACKS	HWY 101 = 50' HWY 7 = 50' SOUTHWEST = 30' NORTHWEST = 30'

BUILDING DATA SUMMARY

AREAS	
PROPOSED PROPERTY	36,237 SF (0.83 AC)
BUILDING AREA	5,400 SF (6.7% OF TOTAL PROPERTY AREA)
PARKING	
REQUIRED PARKING	AS DETERMINED BY ZONING ADMINISTRATOR
PROPOSED PARKING	11 SPACES
ADA STALLS REQ'D / PROVIDED	1 STALLS / 1 STALLS

SITE PLAN NOTES

1. ALL WORK AND MATERIALS SHALL COMPLY WITH ALL CITY/COUNTY REGULATIONS AND CODES AND O.S.H.A. STANDARDS.
2. CONTRACTOR SHALL REFER TO THE ARCHITECTURAL PLANS FOR EXACT LOCATIONS AND DIMENSIONS OF VESTIBULES, SLOPE PAVING, SIDEWALKS, EXIT PORCHES, TRUCK DOCKS, PRECISE BUILDING DIMENSIONS AND EXACT BUILDING UTILITY ENTRANCE LOCATIONS.
3. ALL INNER CURBED RADII ARE TO BE 2' AND OUTER CURBED RADII ARE TO BE <10'> UNLESS OTHERWISE NOTED. STRIPED RADII ARE TO BE 5'.
4. ALL DIMENSIONS AND RADII ARE TO THE FACE OF CURB UNLESS OTHERWISE NOTED.
5. EXISTING STRUCTURES WITHIN CONSTRUCTION LIMITS ARE TO BE ABANDONED, REMOVED OR RELOCATED AS NECESSARY. ALL COST SHALL BE INCLUDED IN BASE BID.
6. CONTRACTOR SHALL BE RESPONSIBLE FOR ALL RELOCATIONS, (UNLESS OTHERWISE NOTED ON PLANS) INCLUDING BUT NOT LIMITED TO, ALL UTILITIES, STORM DRAINAGE, SIGNS, TRAFFIC SIGNALS & POLES, ETC. AS REQUIRED. ALL WORK SHALL BE IN ACCORDANCE WITH GOVERNING AUTHORITIES REQUIREMENTS AND PROJECT SITE WORK SPECIFICATIONS AND SHALL BE APPROVED BY SUCH. ALL COST SHALL BE INCLUDED IN BASE BID.
7. SITE BOUNDARY, TOPOGRAPHY, UTILITY AND ROAD INFORMATION TAKEN FROM A SURVEY BY EGAN, FIELD & NOWAK, INC., DATED 06/17/2021.

   KIMLEY-HORN ASSUMES NO LIABILITY FOR ANY ERRORS, INACCURACIES, OR OMISSIONS CONTAINED THEREIN.
8. TOTAL LAND AREA IS 0.83 ACRES.
9. PYLON / MONUMENT SIGNS SHALL BE CONSTRUCTED BY OTHERS. SIGNS ARE SHOWN FOR GRAPHICAL & INFORMATIONAL PURPOSES ONLY. CONTRACTOR TO VERIFY SIZE, LOCATION AND ANY REQUIRED PERMITS NECESSARY FOR THE CONSTRUCTION OF THE PYLON / MONUMENT SIGN.
10. CONTRACTOR SHALL REFERENCE ARCH / MEP PLANS FOR SITE LIGHTING AND ELECTRICAL PLAN.
11. NO PROPOSED LANDSCAPING SUCH AS TREES OR SHRUBS, ABOVE AND UNDERGROUND STRUCTURES, OR OTHER OBSTRUCTIONS SHALL BE LOCATED WITHIN EXISTING OR PROPOSED UTILITY EASEMENTS AND RIGHTS OF WAY UNLESS SPECIFICALLY NOTED ON PLANS OTHERWISE.
12. REFERENCE ARCHITECTURAL PLANS FOR DUMPSTER ENCLOSURE DETAILS.
13. REFER TO FINAL PLAT OR ALTA SURVEY FOR EXACT LOT AND PROPERTY BOUNDARY DIMENSIONS.
14. ALL AREAS ARE ROUNDED TO THE NEAREST SQUARE FOOT.
15. ALL DIMENSIONS ARE ROUNDED TO THE NEAREST TENTH FOOT.
16. ALL PARKING STALLS TO BE 13' IN WIDTH AND 18' IN LENGTH UNLESS OTHERWISE INDICATED.

KEYNOTE LEGEND

A	CONCRETE SIDEWALK
B	MATCH EXISTING EDGE OF PAVEMENT/ CURB & GUTTER
C	ACCESSIBLE CURB RAMP
D	ACCESSIBLE PARKING SIGN
E	ACCESSIBLE PARKING STALL
F	AREA STRIPED WITH 4" SYSL @ 45° 2' O.C.
G	CONCRETE PAVEMENT PER MISTER CARWASH STANDARDS AND SPECIFICATIONS
H	LANDSCAPE AREA. COMPACTION SHALL BE PREVENTED (TYP.)
I	B612 CURB & GUTTER (TYP.)
J	TRANSITION CURB
K	FLUSH CURB
L	ROLLED CURB
M	TRENCH DRAIN WITH EXIT SIGN PER MISTER CAR WASH STANDARDS AND SPECIFICATIONS
N	WAYFINDING SIGNAGE (DO NOT ENTER, ENTER ONLY, ETC.)
O	DIRECTIONAL TRAFFIC ARROW. PER GREENBOOK STANDARDS
P	VACUUM EQUIPMENT: REF. ARCHITECTURAL PLANS
Q	POS CANOPY AND EQUIPMENT: REF. ARCHITECTURAL PLANS
R	INSTALL YARD GATE PER MISTER CARWASH STANDARDS AND SPECIFICATIONS

No.	REVISIONS	DATE	BY

Kimley»Horn
© 2021 KIMLEY-HORN AND ASSOCIATES, INC.
767 EUSTIS STREET, SUITE 100, ST. PAUL, MN 55114
PHONE: 651-645-4197
WWW.KIMLEY-HORN.COM

I HEREBY CERTIFY THAT THIS PLAN, SPECIFICATION OR REPORT WAS PREPARED BY ME OR UNDER MY DIRECT SUPERVISION AND THAT I AM A DULY LICENSED PROFESSIONAL ENGINEER UNDER THE LAWS OF THE STATE OF MINNESOTA.

WILLIAM D. MATZEK, P.E.
DATE: 12/20/2021 MN LIC. NO. 45790

KHA PROJECT	160284002
DATE	12/20/2021
SCALE	AS SHOWN
DESIGNED BY	ACL
DRAWN BY	AJW
CHECKED BY	WDM

SITE PLAN

ISSUED FOR PERMIT - NOT FOR CONSTRUCTION

MISTER CAR WASH - MINNETONKA, MN

PREPARED FOR

MISTER CAR WASH

MINNETONKA MN

SHEET NUMBER

C400

K:\TWC_LDEV\mister car wash\minnetonka, mn\3 Design\CAD\plansheets\C4-SITE PLAN.dwg December 20, 2021 - 5:59pm

This document, together with the concepts and designs presented herein, as an instrument of service, is intended only for the specific purpose and client for which it was prepared. Reuse of and improper reliance on this document without written authorization and adaptation by Kimley-Horn and Associates, Inc. shall be without liability to Kimley-Horn and Associates, Inc.

K:\TWC_LDEV\mister car wash\minnetonka, mn\3 Design\CAD\plansheets\C4-SITE DETAILS.dwg December 20, 2021 - 5:59pm

This document, together with the concepts and designs presented herein, as an instrument of service, is intended only for the specific purpose and client for which it was prepared. Reuse of and improper reliance on this document without written authorization and adaptation by Kimley-Horn and Associates, Inc. shall be without liability to Kimley-Horn and Associates, Inc.

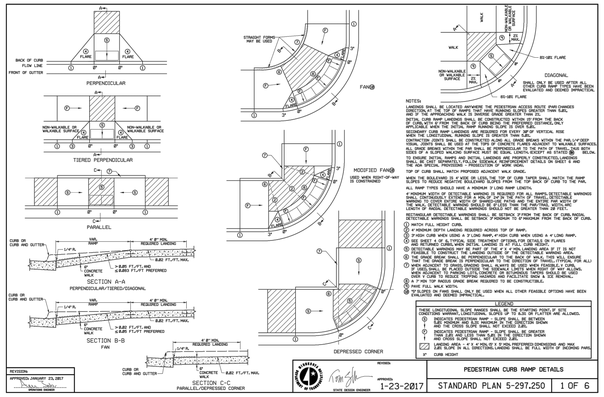

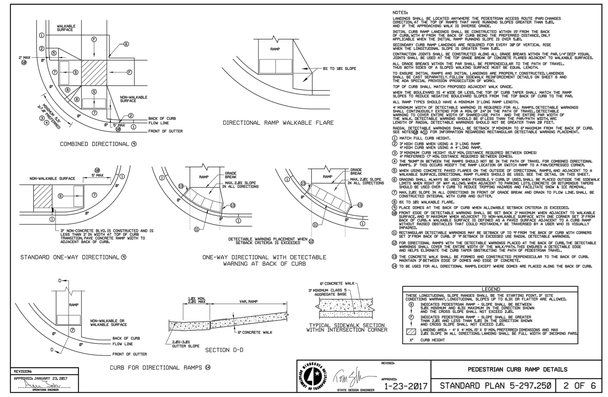

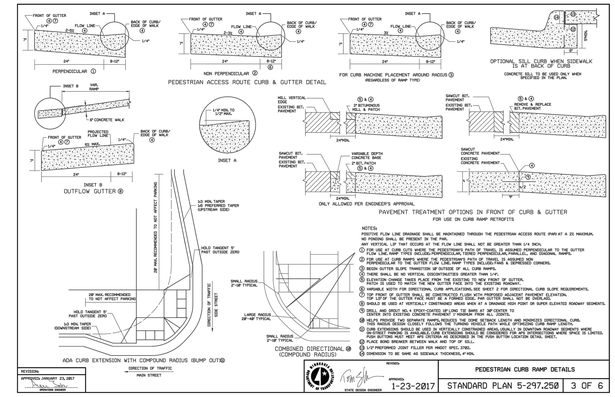

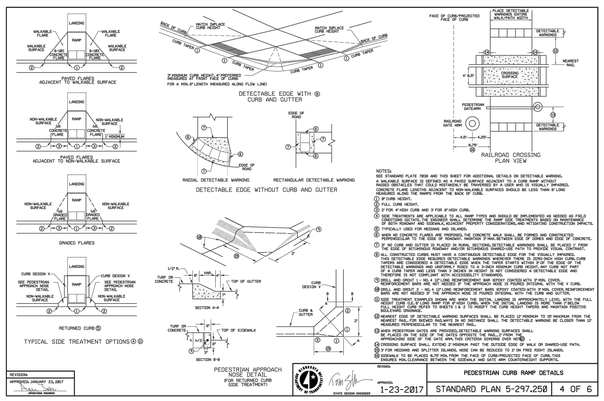

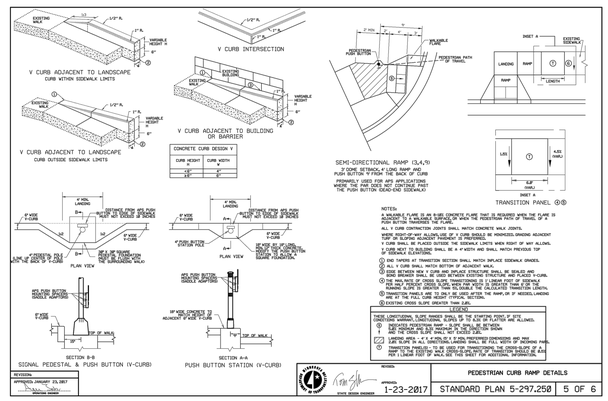

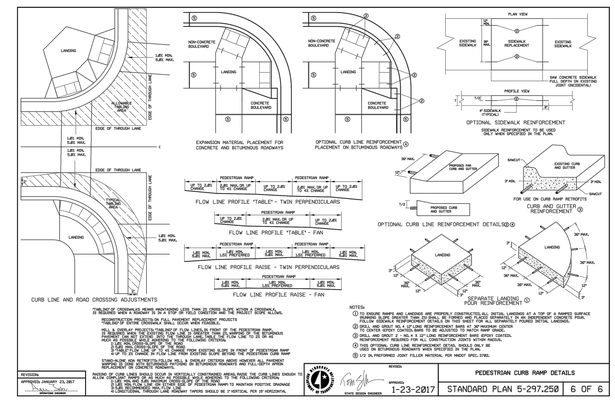

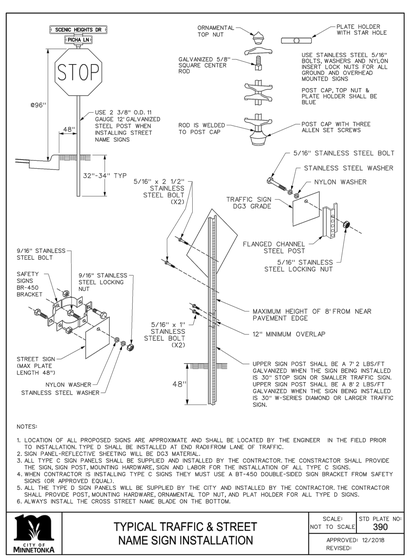

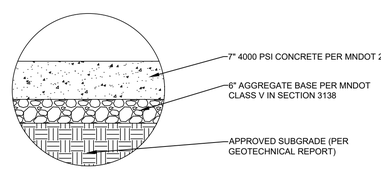

HEAVY DUTY CONCRETE PAVEMENT

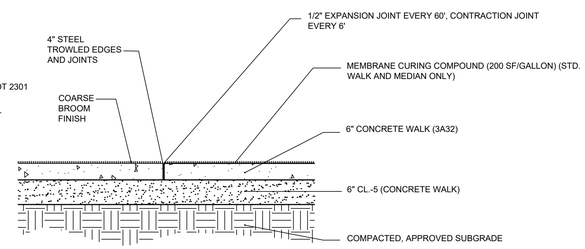

CONCRETE WALK

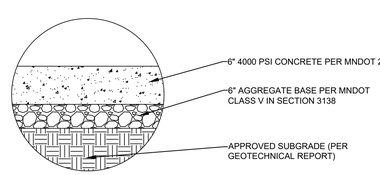

STANDARD DUTY CONCRETE PAVEMENT

PAVEMENT SECTIONS ARE PROVIDED FOR REFERENCE ONLY. REFER TO GEOTECHNICAL REPORT FOR ALL PAVEMENT, SUBGRADE PREPERATION, AND COMPACTION REQUIREMENTS.

NOTE: AN ADEQUATE NUMBER OF LONGITUDINAL AND TRANSVERSE CONTROL JOINTS SHOULD BE PLACED IN THE PAVEMENT IN ACCORDANCE WITH ACI AND OR AASHTO REQUIREMENTS. EXPANSION JOINTS MUST BE FULL DEPTH AND SHOULD BE USED TO ISOLATE FIXED OBJECTS ABUTTING OR WITHIN THE PAVED AREA.

No.	REVISIONS	DATE	BY

Kimley»Horn
2021 KIMLEY-HORN AND ASSOCIATES, INC.
767 EUSTIS STREET, SUITE 100, ST. PAUL, MN 55114
PHONE: 651-645-4197
WWW.KIMLEY-HORN.COM

I HEREBY CERTIFY THAT THIS PLAN, SPECIFICATION OR REPORT WAS PREPARED BY ME OR UNDER MY DIRECT SUPERVISION AND THAT I AM A DULY LICENSED PROFESSIONAL ENGINEER UNDER THE LAWS OF THE STATE OF MINNESOTA.

WILLIAM D. MATZEK, P.E.
DATE: 12/20/2021 MN LIC. NO. 45790

KHA PROJECT	160284002
DATE	12/20/2021
SCALE	AS SHOWN
DESIGNED BY	ACL
DRAWN BY	AJW
CHECKED BY	WDM

ISSUED FOR PERMIT - NOT FOR CONSTRUCTION

SITE DETAILS

MISTER CAR WASH - MINNETONKA, MN
PREPARED FOR
MISTER CAR WASH
MINNETONKA MN

SHEET NUMBER
C401

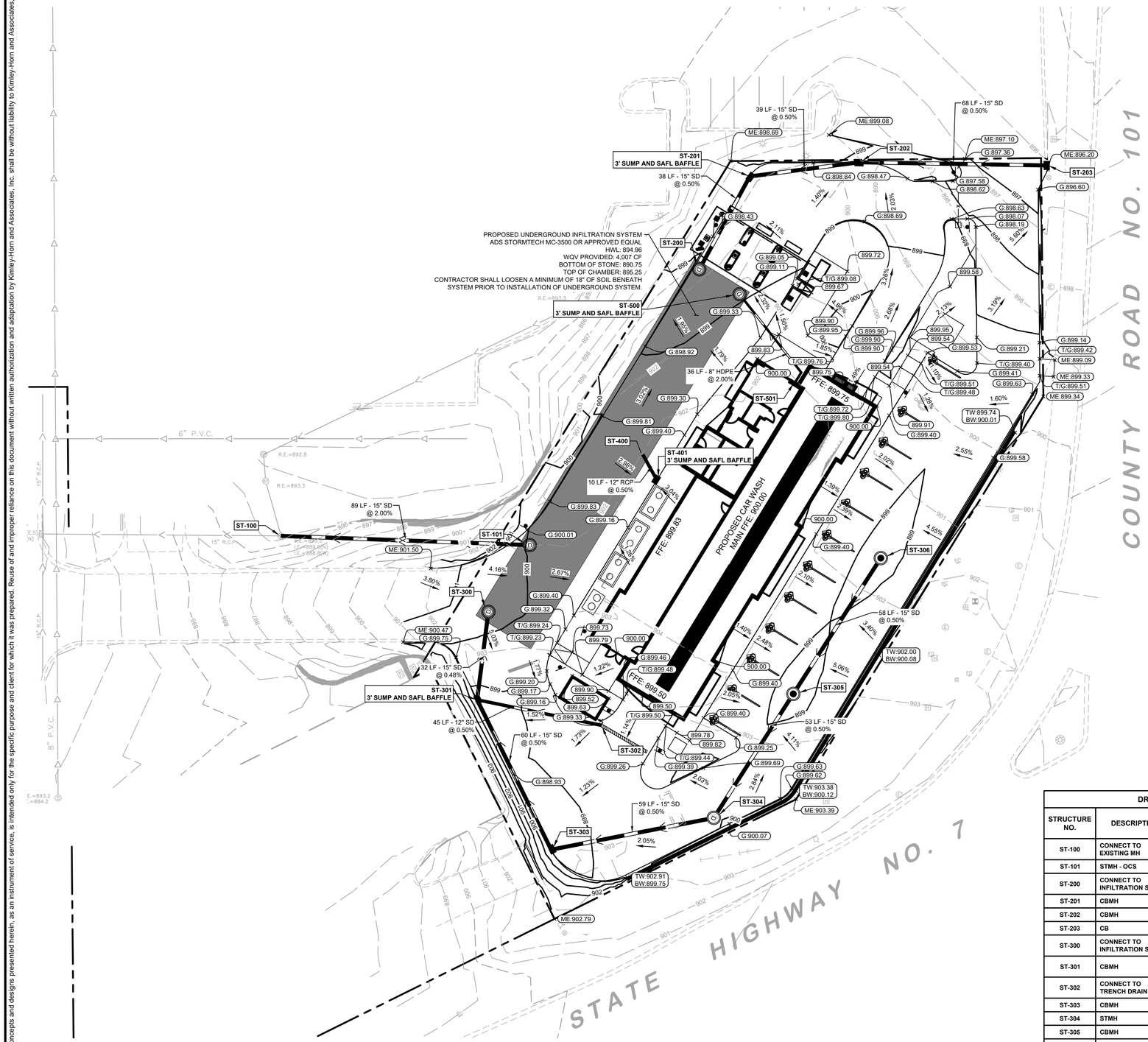

LEGEND

- PROPERTY LINE
- EXISTING CONTOUR
- PROPOSED CONTOUR
- PROPOSED STORM MANHOLE (SOLID CASTING)
- PROPOSED STORM MANHOLE (ROUND INLET CASTING)
- PROPOSED STORM MANHOLE/ CATCH BASIN (CURB INLET CASTING)
- PROPOSED STORM SEWER CLENOUT
- PROPOSED FLARED END SECTION
- PROPOSED RIPRAP
- PROPOSED STORM SEWER
- PROPOSED STORM SEWER
- PROPOSED SPOT ELEVATION
- PROPOSED HIGH POINT ELEVATION
- PROPOSED LOW POINT ELEVATION
- PROPOSED GUTTER ELEVATION
- PROPOSED TOP OF CURB ELEVATION
- PROPOSED FLUSH PAVEMENT ELEVATION
- MATCH EXISTING ELEVATION
- PROPOSED EMERGENCY OVERFLOW
- PROPOSED DRAINAGE DIRECTION
- PROPOSED ADA SLOPE

GRADING PLAN NOTES

1. ALL WORK SHALL BE PERFORMED IN ACCORDANCE WITH THE CITY OF MINNETONKA, SPECIFICATIONS AND BUILDING PERMIT REQUIREMENTS.
2. CONTRACTOR TO CALL GOPHER STATE CALL ONE @ <1-800-252-1166> AT LEAST TWO WORKING DAYS PRIOR TO EXCAVATION/CONSTRUCTION FOR UTILITY LOCATIONS.
3. STORM SEWER PIPE SHALL BE AS FOLLOWS:
   RCP PER ASTM C-76
   HDPE: 0" - 10" PER AASHTO M-252
   HDPE: 12" OR GREATER PER ASTM F-2306
   PVC SCH. 40 PER ASTM D-1785
   STORM SEWER FITTINGS SHALL BE AS FOLLOWS:
   RCP PER ASTM C-76, JOINTS PER ASTM C-361, C-990, AND C-443
   HDPE PER ASTM 3212
   PVC PER ASTM D-3034, JOINTS PER ASTM D-3212
4. CONTRACTOR TO FIELD VERIFY THE LOCATIONS AND ELEVATIONS OR EXISTING UTILITIES AND TOPOGRAPHIC FEATURES PRIOR TO THE START OF SITE GRADING. THE CONTRACTOR SHALL IMMEDIATELY NOTIFY THE PROJECT ENGINEER OF ANY DISCREPANCIES OR VARIATIONS.
5. SUBGRADE EXCAVATION SHALL BE BACKFILLED IMMEDIATELY AFTER EXCAVATION TO HELP OFFSET ANY STABILITY PROBLEMS DUE TO WATER SEEPAGE OR STEEP SLOPES. WHEN PLACING NEW SURFACE MATERIAL ADJACENT TO EXISTING PAVEMENT, THE EXCAVATION SHALL BE BACKFILLED PROMPTLY TO AVOID UNDERMINING OF EXISTING PAVEMENT.
6. CONTRACTOR SHALL BE RESPONSIBLE FOR ALL HORIZONTAL AND VERTICAL CONTROL.
7. CONTRACTOR SHALL EXCAVATE DRAINAGE TRENCHES TO FOLLOW PROPOSED STORM SEWER ALIGNMENTS.
8. GRADES SHOWN ARE FINISHED GRADES. CONTRACTOR SHALL ROUGH GRADE TO SUBGRADE ELEVATION AND LEAVE STREET READY FOR SUBBASE.
9. ALL EXCESS MATERIAL, BITUMINOUS SURFACING, CONCRETE ITEMS, ANY ABANDONED UTILITY ITEMS, AND OTHER UNSTABLE MATERIALS SHALL BECOME THE PROPERTY OF THE CONTRACTOR AND SHALL BE DISPOSED OF OFF THE CONSTRUCTION SITE.
10. REFER TO THE UTILITY PLAN FOR SANITARY SEWER MAIN, WATER MAIN SERVICE LAYOUT AND ELEVATIONS AND CASTING / STRUCTURE NOTATION.
11. CONTRACTOR IS RESPONSIBLE FOR CONSTRUCTION OF PAVEMENTS AND CURB AND GUTTER WITH SMOOTH UNIFORM SLOPES TO PROVIDE POSITIVE DRAINAGE.
12. INSTALL A MINIMUM OF <4" CLASS 5> AGGREGATE BASE UNDER CURB AND GUTTER AND CONCRETE SIDEWALKS.
13. UPON COMPLETION OF EXCAVATION AND FILLING, CONTRACTOR SHALL RESTORE ALL STREETS AND DISTURBED AREAS ON SITE. ALL DISTURBED AREAS SHALL BE RE-VEGETATED WITH A MINIMUM OF <4" OF TOPSOIL>.
14. ALL SPOT ELEVATIONS/CONTOURS ARE TO GUTTER / FLOW LINE UNLESS OTHERWISE NOTED.
15. GRADING FOR ALL SIDEWALKS AND ACCESSIBLE ROUTES INCLUDING CROSSING DRIVEWAYS SHALL CONFORM TO CURRENT ADA STATE/NATIONAL STANDARDS. IN NO CASE SHALL ACCESSIBLE RAMP SLOPES EXCEED 1 VERTICAL TO 12 HORIZONTAL. IN NO CASE SHALL SIDEWALK CROSS SLOPES EXCEED 2% . IN NO CASE SHALL LONGITUDINAL SIDEWALK SLOPES EXCEED 5%. IN NO CASE SHALL ACCESSIBLE PARKING STALLS OR AISLES EXCEED 2% (1.5% TARGET) IN ALL DIRECTIONS. SIDEWALK ACCESS TO EXTERNAL BUILDING DOORS AND GATES SHALL BE ADA COMPLIANT. CONTRACTOR SHALL NOTIFY ENGINEER IMMEDIATELY IF ADA CRITERIA CANNOT BE MET IN ANY LOCATION PRIOR TO PAVING. NO CONTRACTOR CHANGE ORDERS WILL BE ACCEPTED FOR A.D.A COMPLIANCE ISSUES.
16. MAINTAIN A MINIMUM OF 0.5% GUTTER SLOPE TOWARDS LOW POINTS.
17. CONTRACTOR TO PROVIDE 3" INSULATION BY 5' WIDE CENTERED ON STORM PIPE IF LESS THAN 4' OF COVER IN PAVEMENT AREAS AND LESS THAN 3' OF COVER IN LANDSCAPE AREAS.
18. ROOF DRAIN INVERT CONNECTIONS AT THE BUILDING SHALL BE AT ELEVATION 895.00 OR LOWER UNLESS NOTED OTHERWISE. REFERENCE MEP PLANS FOR ROOF DRAIN CONNECTION.
19. ALL STORM SEWER CONNECTIONS SHALL BE GASKETED AND WATER TIGHT INCLUDING MANHOLE CONNECTIONS.
20. ALL STORM SEWER PIPE SHALL BE AIR TESTED IN ACCORDANCE WITH THE CURRENT PLUMBING CODE.
21. MAINTAIN A MINIMUM OF 1.25% SLOPE IN BITUMINOUS PAVEMENT AREAS, 0.5% SLOPE IN CONCRETE PAVEMENT AREAS.
22. CONTRACTOR SHALL REVIEW PAVEMENT GRADIENT AND CONSTRUCT "INFALL CURB" WHERE PAVEMENT DRAINS TOWARD GUTTER, AND "OUTFALL" CURB WHERE PAVEMENT DRAINS AWAY FROM GUTTER.
23. EMBEDMENT BACKFILL AND FOUNDATION STONE IN THE UNDERGROUND INFILTRATION SYSTEM MUST BE WASHED, CRUSHED ANGULAR STONE AND LIMESTONE IS NOT ALLOWED.

DRAINAGE SCHEDULE

STRUCTURE NO.	DESCRIPTION	RIM/GRATE ELEVATION	INVERT ELEVATION IN	INVERT ELEVATION OUT
ST-100	CONNECT TO EXISTING MH		E 888.88	
ST-101	STMH - OCS	897.24		W 890.66
ST-200	CONNECT TO INFILTRATION SYSTEM	898.60	NE 893.10	
ST-201	CBMH	898.14	E 893.29	SW 893.29
ST-202	CBMH	898.29	E 893.49	W 893.49
ST-203	CB	896.12		W 893.82
ST-300	CONNECT TO INFILTRATION SYSTEM	900.43	S 893.91	
ST-301	CBMH	898.65	SE 894.06 E 897.07	N 894.06
ST-302	CONNECT TO TRENCH DRAIN			W 897.30
ST-303	CBMH	898.63	E 894.36	NW 894.36
ST-304	STMH	899.92	NE 894.66	W 894.66
ST-305	CBMH	898.82	NE 894.92	SW 894.92
ST-306	CBMH	898.80		SW 895.21
ST-400	CONNECT TO INFILTRATION SYSTEM		SE 893.10	
ST-401	CB	899.00		NW 893.15
ST-500	CONNECT TO INFILTRATION SYSTEM	898.94	SE 893.00	
ST-501	ROOF DRAIN			NE 893.80

NORTH

GRAPHIC SCALE IN FEET
0 10 20 40

ISSUED FOR PERMIT - NOT FOR CONSTRUCTION

No.	REVISIONS	DATE	BY

Kimley»Horn
© 2021 KIMLEY-HORN AND ASSOCIATES, INC.
767 EUSTIS STREET, SUITE 100, ST. PAUL, MN 55114
PHONE: 651-645-4197
WWW.KIMLEY-HORN.COM

I HEREBY CERTIFY THAT THIS PLAN, SPECIFICATION OR REPORT WAS PREPARED BY ME OR UNDER MY DIRECT SUPERVISION AND THAT I AM A DULY LICENSED PROFESSIONAL ENGINEER UNDER THE LAWS OF THE STATE OF MINNESOTA.

WILLIAM D. MATZEK, P.E.
DATE: 12/20/2021 MN LIC. NO. 45790

KHA PROJECT	160284002
DATE	12/20/2021
SCALE	AS SHOWN
DESIGNED BY	ACL
DRAWN BY	AJW
CHECKED BY	WDM

GRADING PLAN

MISTER CAR WASH - MINNETONKA, MN
PREPARED FOR
MISTER CAR WASH
MINNETONKA MN

SHEET NUMBER
C500

K:\TWC_LDEV\Mister Car Wash\Minnetonka, MN\3 Design\CAD\PlanSheets\C5-GRADING PLAN.dwg January 18, 2022 - 5:02pm
This document, together with the concepts and designs presented herein, as an instrument of service, is intended only for the specific purpose and client for which it was prepared. Reuse of and improper reliance on this document without written authorization and adaptation by Kimley-Horn and Associates, Inc. shall be without liability to Kimley-Horn and Associates, Inc.

K:\TWC_LDEV\mister car wash\minnetonka, mn\3 Design\CAD\plansheets\C5-GRADING DETAILS.dwg December 20, 2021 - 6:00pm

This document, together with the concepts and designs presented herein, as an instrument of service, is intended only for the specific purpose and client for which it was prepared. Reuse of and improper reliance on this document without written authorization and adaptation by Kimley-Horn and Associates, Inc. shall be without liability to Kimley-Horn and Associates, Inc.

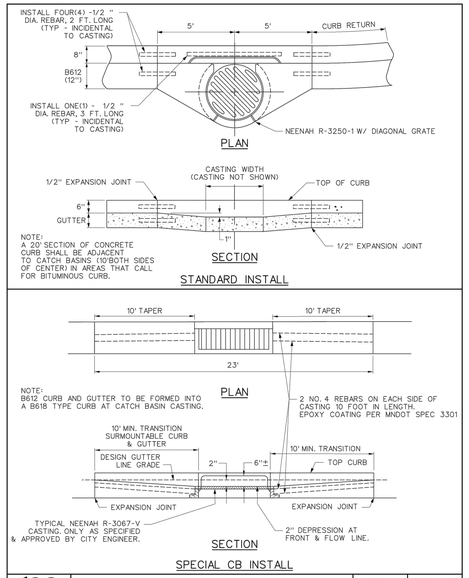

CITY OF MINNETONKA

CATCH BASIN INSTALLATION

SCALE: NOT TO SCALE	STD PLATE NO: 110
APPROVED: 9/2000 REVISED: 8/2018	

DIMENSION CHART

DIM	CB/MANHOLE TYPE				
	B	C	D	E	F	G
P	48"	60"	72"	84"	96"	102"
K	6"	7"	8"	9"	9"	9"
T	6"	8"	8"	8"	8"	8"
W	58"	72"	86"	100"	114"	121"
A	9.5"	15.5"	21.5"	27.5"	34.5"	38"
H	1.78'	1.78'	1.78'	1.78'	1.78'	1.78'
I	2.58'	3.08'	3.58'	4.08'	4.67'	4.96'
B	5"	6"	7"	8"	9"	9.5"
S	6"	8"	8"	8"	8"	8"

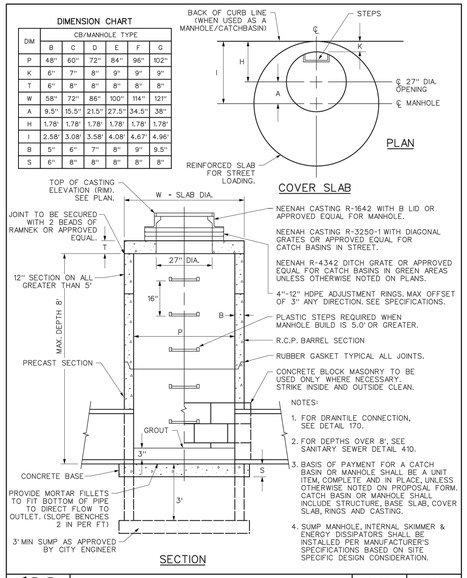

CITY OF MINNETONKA

STANDARD CATCH BASIN / MANHOLE
4020

SCALE: NOT TO SCALE	STD PLATE NO: 130
APPROVED: 4/2005 REVISED: 8/2018	

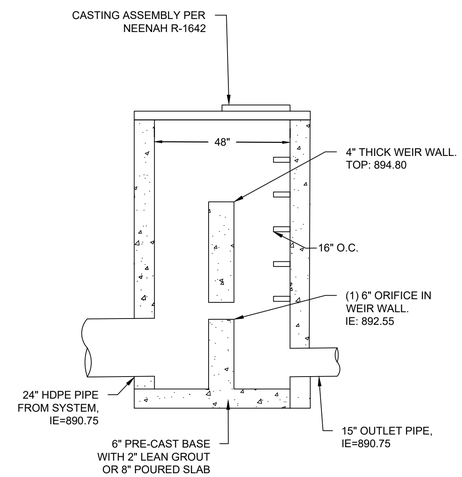

OUTLET CONTROL STRUCTURE
STRM 101
N.T.S.

No.	REVISIONS	DATE	BY

Kimley»Horn
2021 KIMLEY-HORN AND ASSOCIATES, INC.
767 EUSTIS STREET, SUITE 100, ST. PAUL, MN 55114
PHONE: 651-645-4197
WWW.KIMLEY-HORN.COM

I HEREBY CERTIFY THAT THIS PLAN, SPECIFICATION OR REPORT WAS PREPARED BY ME OR UNDER MY DIRECT SUPERVISION AND THAT I AM A DULY LICENSED PROFESSIONAL ENGINEER UNDER THE LAWS OF THE STATE OF MINNESOTA.

WILLIAM D. MATZEK, P.E.

DATE: 12/20/2021 MN LIC. NO. 45790

KHA PROJECT 160284002	
DATE 12/20/2021	
SCALE	AS SHOWN
DESIGNED BY	ACL
DRAWN BY	AJW
CHECKED BY	WDM

GRADING DETAILS

ISSUED FOR PERMIT - NOT FOR CONSTRUCTION

MISTER CAR WASH - MINNETONKA, MN

PREPARED FOR
MISTER CAR WASH

MINNETONKA MN

SHEET NUMBER
C501

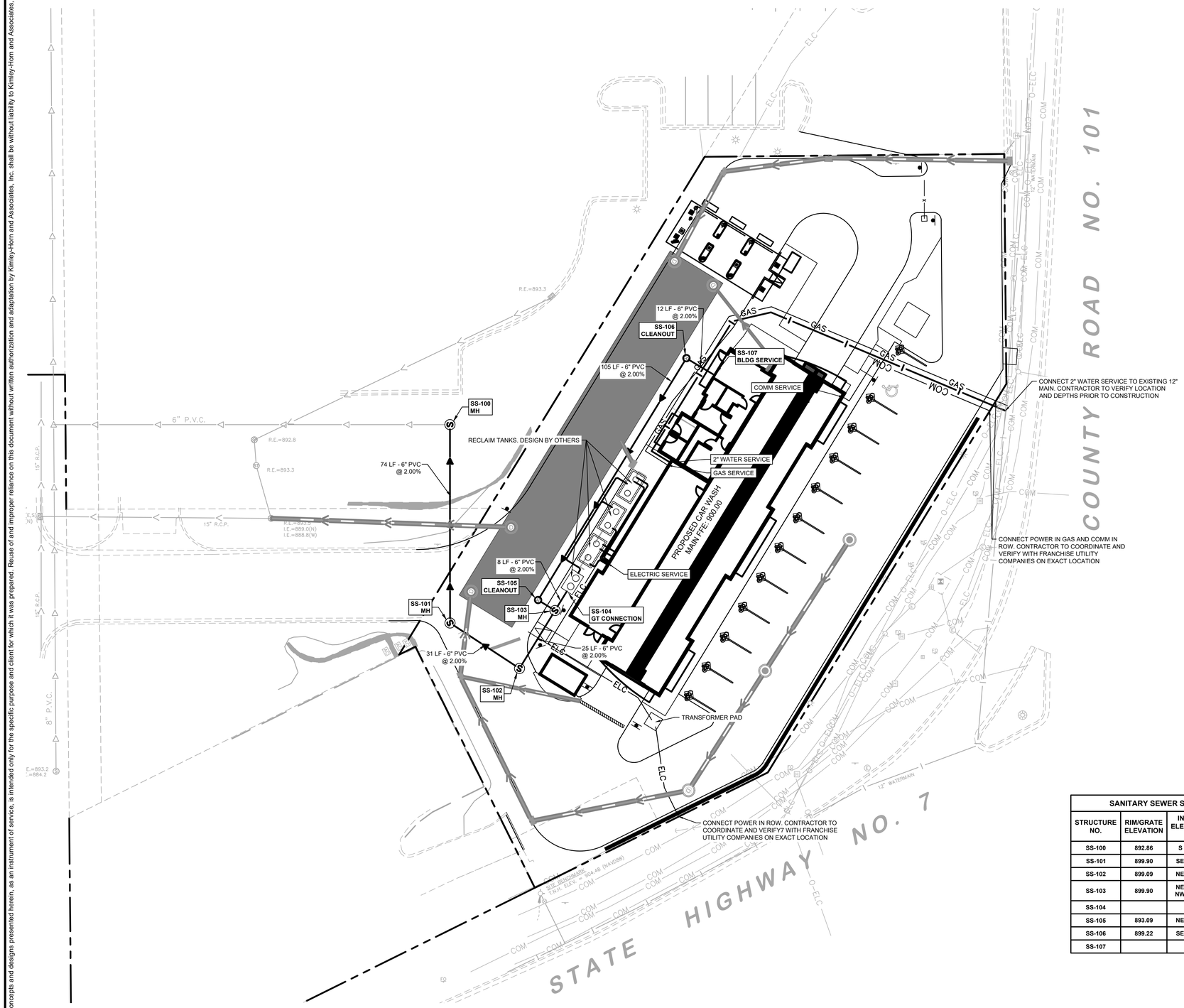

LEGEND

EXISTING	PROPOSED	
		GATE VALVE
		HYDRANT
		REDUCER
		TEE
		SANITARY SEWER MANHOLE
		SANITARY CLEANOUT
		WATERMAIN
		SANITARY SEWER
		STORM SEWER
		STORM SEWER
ELC	ELC	UNDERGROUND ELECTRIC
COM	COM	TELEPHONE
GAS	GAS	GAS MAIN

UTILITY PLAN NOTES

1. ALL FILL MATERIAL IS TO BE IN PLACE, AND COMPACTED BEFORE INSTALLATION OF PROPOSED UTILITIES.
2. SANITARY SEWER PIPE SHALL BE AS FOLLOWS:
   8" PVC SDR35 PER ASTM D-3034. FOR PIPES LESS THAN 12' DEEP
   8" PVC SDR26 PER ASTM D-3034. FOR PIPES MORE THAN 12' DEEP
   6" PVC SCHEDULE 40 PER ASTM D-1785
   DUCTILE IRON PIPE PER AWWA C150
3. WATER LINES SHALL BE AS FOLLOWS:
   6" AND LARGER, PVC C-900 PER ASTM D 2241
   CLASS 200 UNDER COUNTY ROADS, OTHERWISE CLASS 150
   4" AND LARGER DUCTILE IRON PIPE PER AWWA C150
   SMALLER THAN 3" PIPING SHALL BE COPPER TUBE TYPE "K" PER
   ANSI 816.22 OR PVC, 200 P.S.I., PER ASTM D1784 AND D2241.
4. MINIMUM TRENCH WIDTH SHALL BE 2 FEET.
5. ALL WATER JOINTS ARE TO BE MECHANICAL JOINTS WITH RESTRAINTS SUCH AS THRUST BLOCKING, WITH STAINLESS STEEL OR COBALT BLUE BOLTS, OR AS INDICATED IN THE CITY SPECIFICATIONS AND PROJECT DOCUMENTS.
6. ALL UTILITIES SHOULD BE KEPT TEN (10') APART (PARALLEL) OR WHEN CROSSING 18" VERTICAL CLEARANCE (OUTSIDE EDGE OF PIPE TO OUTSIDE EDGE OF PIPE OR STRUCTURE).
7. CONTRACTOR SHALL MAINTAIN A MINIMUM OF 7'-5" COVER ON ALL WATERLINES.
8. IN THE EVENT OF A VERTICAL CONFLICT BETWEEN WATER LINES, SANITARY LINES, STORM LINES AND GAS LINES, OR ANY OBSTRUCTION (EXISTING AND PROPOSED), THE SANITARY LINE SHALL BE SCH. 40 OR C900 WITH MECHANICAL JOINTS AT LEAST 10 FEET ON EITHER SIDE OF THE CENTER LINE OF THE CROSSING. THE WATER LINE SHALL HAVE MECHANICAL JOINTS WITH APPROPRIATE FASTENERS AS REQUIRED TO PROVIDE A MINIMUM OF 18" VERTICAL SEPARATION. MEETING REQUIREMENTS OF ANSI A21.10 OR ANSI 21.11 (AWWA C-151) (CLASS 50).
9. LINES UNDERGROUND SHALL BE INSTALLED, INSPECTED AND APPROVED BEFORE BACKFILLING.
10. TOPS OF MANHOLES SHALL BE RAISED AS NECESSARY TO BE FLUSH WITH PROPOSED PAVEMENT ELEVATIONS, AND TO BE ONE FOOT ABOVE FINISHED GROUND ELEVATIONS, IN GREEN AREAS, WITH WATERTIGHT LIDS.
11. ALL CONCRETE FOR ENCASEMENTS SHALL HAVE A MINIMUM 28 DAY COMPRESSION STRENGTH AT 3000 P.S.I.
12. EXISTING UTILITIES SHALL BE VERIFIED IN FIELD PRIOR TO INSTALLATION OF ANY NEW LINES.
13. REFER TO INTERIOR PLUMBING DRAWINGS FOR TIE-IN OF ALL UTILITIES.
14. CONTRACTOR IS RESPONSIBLE FOR COMPLYING TO THE SPECIFICATIONS OF THE CITY OF MINNETONKA AND/OR STATE OF MN WITH REGARDS TO MATERIALS AND INSTALLATION OF THE WATER AND SEWER LINES.
15. THE CONTRACTOR IS SPECIFICALLY CAUTIONED THAT THE LOCATION AND/OR ELEVATION OF EXISTING UTILITIES AS SHOWN ON THESE PLANS IS BASED ON RECORDS OF THE VARIOUS UTILITY COMPANIES, AND WHERE POSSIBLE, MEASUREMENTS TAKEN IN THE FIELD. THE INFORMATION IS NOT TO BE RELIED ON AS BEING EXACT OR COMPLETE. THE CONTRACTOR MUST CALL THE APPROPRIATE UTILITY COMPANIES AT LEAST 72 HOURS BEFORE ANY EXCAVATION TO REQUEST EXACT FIELD LOCATION OF UTILITIES. IT SHALL BE THE RESPONSIBILITY OF THE CONTRACTOR TO RELOCATE ALL EXISTING UTILITIES WHICH CONFLICT WITH THE PROPOSED IMPROVEMENTS SHOWN ON THE PLANS.
16. CONTRACTOR IS RESPONSIBLE FOR ALL NECESSARY INSPECTIONS AND/OR CERTIFICATIONS REQUIRED BY CODES AND/OR UTILITY SERVICE COMPANIES.
17. CONTRACTOR SHALL COORDINATE WITH ALL UTILITY COMPANIES FOR INSTALLATION REQUIREMENTS AND SPECIFICATIONS.
18. CONTRACTOR SHALL REFERENCE ARCH / MEP PLANS FOR SITE LIGHTING AND ELECTRICAL PLAN.
19. BACKFLOW DEVICES (DDCV AND PRZ ASSEMBLIES) AND METERS ARE LOCATED IN THE INTERIOR OF THE BUILDING. REF. ARCH / MEP PLANS.
20. ALL ONSITE WATERMAINS AND SANITARY SEWERS SHALL BE PRIVATELY OWNED AND MAINTAINED.
21. ALL WATERMAIN STUBOUTS SHALL BE MECHANICALLY RESTRAINED WITH REACTION BLOCKING.

SANITARY SEWER SCHEDULE

STRUCTURE NO.	RIM/GRATE ELEVATION	INVERT ELEVATION IN	INVERT ELEVATION OUT
SS-100	892.86	S 887.41	
SS-101	899.90	SE 888.98	N 888.88
SS-102	899.09	NE 889.70	NW 889.60
SS-103	899.90	NE 890.56 NW 890.30	SW 890.20
SS-104			SW 890.73
SS-105	893.09	NE 890.55	SE 890.45
SS-106	899.22	SE 892.76	SW 892.66
SS-107			NW 893.00

NORTH

GRAPHIC SCALE IN FEET
0 10 20 40

No.	REVISIONS	DATE	BY

Kimley»Horn
© 2021 KIMLEY-HORN AND ASSOCIATES, INC.
767 EUSTIS STREET, SUITE 100, ST. PAUL, MN 55114
PHONE: 651-645-4197
WWW.KIMLEY-HORN.COM

I HEREBY CERTIFY THAT THIS PLAN, SPECIFICATION OR REPORT WAS PREPARED BY ME OR UNDER MY DIRECT SUPERVISION AND THAT I AM A DULY LICENSED PROFESSIONAL ENGINEER UNDER THE LAWS OF THE STATE OF MINNESOTA.

WILLIAM D. MATZEK, P.E.
DATE: 12/20/2021 MN LIC. NO. 45790

KHA PROJECT	162284002
DATE	12/20/2021
SCALE	AS SHOWN
DESIGNED BY	ACL
DRAWN BY	AJW
CHECKED BY	WDM

UTILITY PLAN

ISSUED FOR PERMIT - NOT FOR CONSTRUCTION

MISTER CAR WASH - MINNETONKA, MN

PREPARED FOR
MISTER CAR WASH

MINNETONKA MN

SHEET NUMBER
C600

K:\TWC_LDEV\mister car wash\minnetonka, mn\3 Design\CAD\plansheets\C6-UTILITY PLAN.dwg December 20, 2021 - 6:01pm
This document, together with the concepts and designs presented herein, as an instrument of service, is intended only for the specific purpose and client for which it was prepared. Reuse of and improper reliance on this document without written authorization and adaptation by Kimley-Horn and Associates, Inc. shall be without liability to Kimley-Horn and Associates, Inc.

K:\TWC_LDEV\mister car wash\minnetonka, mn\3 Design\CAD\plansheets\C6-UTILITY DETAILS.dwg December 20, 2021 - 6:01pm

This document, together with the concepts and designs presented herein, as an instrument of service, is intended only for the specific purpose and client for which it was prepared. Reuse of and improper reliance on this document without written authorization and adaptation by Kimley-Horn and Associates, Inc. shall be without liability to Kimley-Horn and Associates, Inc.

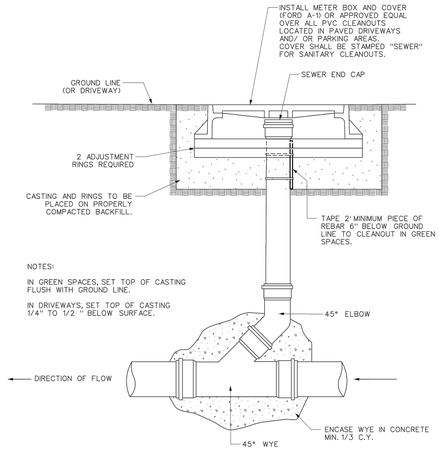

CITY OF MINNETONKA — SERVICE CLEANOUT (SANITARY SEWER & DRAIN TILE) — SCALE: NOT TO SCALE — STD PLATE NO: 400 — APPROVED: 5/2000 — REVISED: 8/2018

DIMENSION CHART

DIM	MANHOLE TYPE					
	B	C	D	E	F	G
P	48"	60"	72"	84"	96"	102"
B	5"	6"	7"	8"	9"	9.5"
S	6"	8"	8"	8"	8"	12"
C	60"	72"	84"	96"	108"	114"

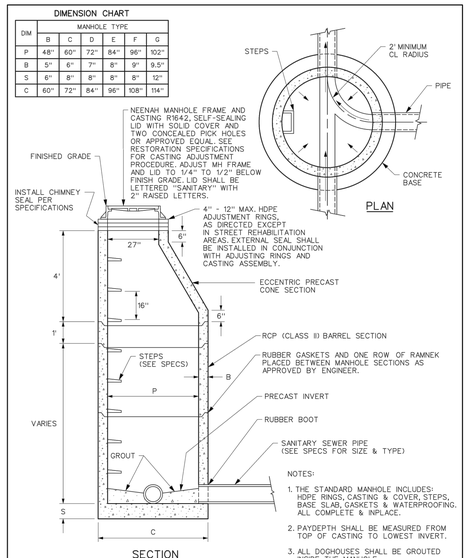

CITY OF MINNETONKA — SANITARY SEWER MANHOLE — SCALE: NOT TO SCALE — STD PLATE NO: 410 — APPROVED: 4/2000 — REVISED: 8/2018

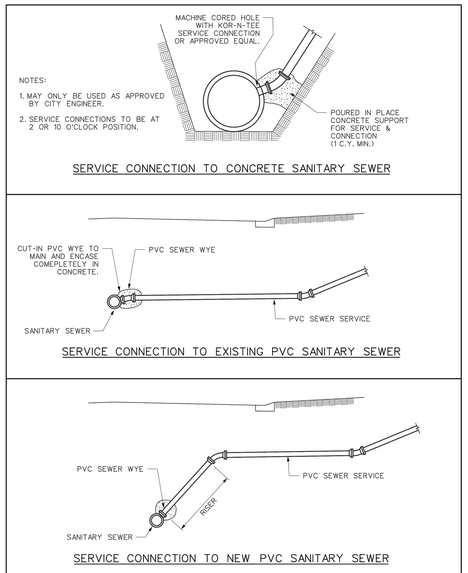

CITY OF MINNETONKA — PRIVATE CONNECTIONS TO PUBLIC UTILITIES — SCALE: NOT TO SCALE — STD PLATE NO: 450 — APPROVED: 8/2018 — REVISED:

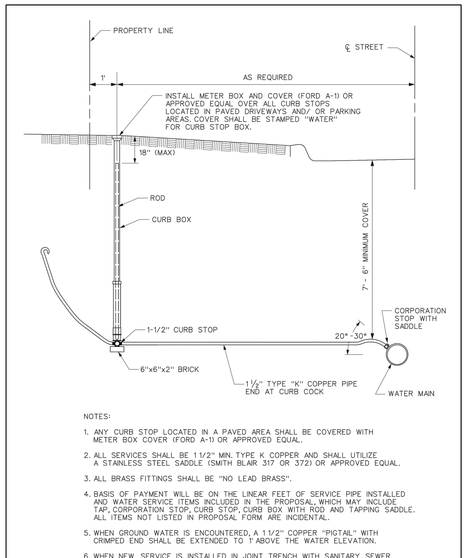

CITY OF MINNETONKA — WATER SERVICE CONNECTION — SCALE: NOT TO SCALE — STD PLATE NO: 510 — APPROVED: 5/2000 — REVISED: 8/2018

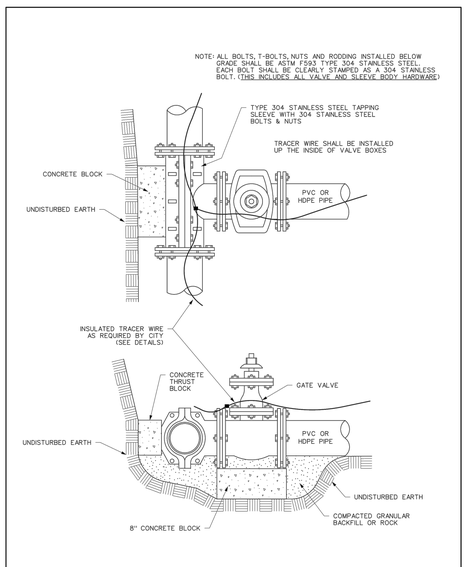

CITY OF MINNETONKA — WATERMAIN WET TAP — SCALE: NOT TO SCALE — STD PLATE NO: 530 — APPROVED: 12/2018 — REVISED:

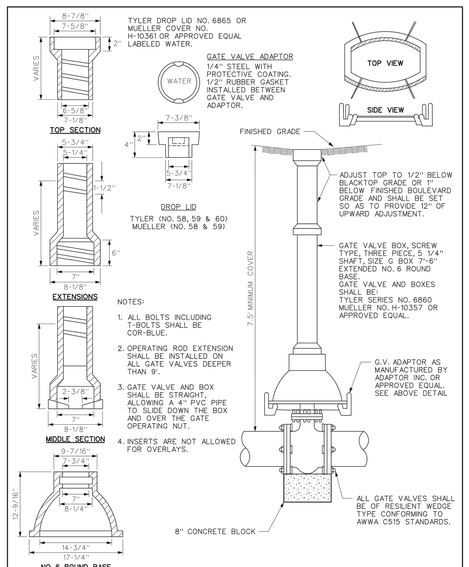

CITY OF MINNETONKA — GATE VALVE — SCALE: NOT TO SCALE — STD PLATE NO: 540 — APPROVED: 1/2008 — REVISED: 8/2018

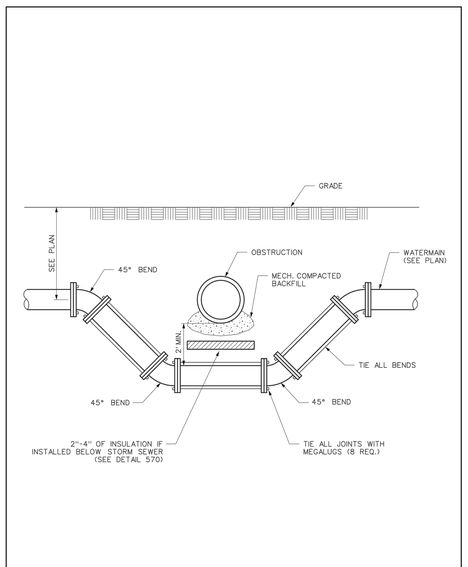

CITY OF MINNETONKA — WATERMAIN OFFSET WITH MEGALUGS — SCALE: NOT TO SCALE — STD PLATE NO: 560 — APPROVED: 8/2018 — REVISED:

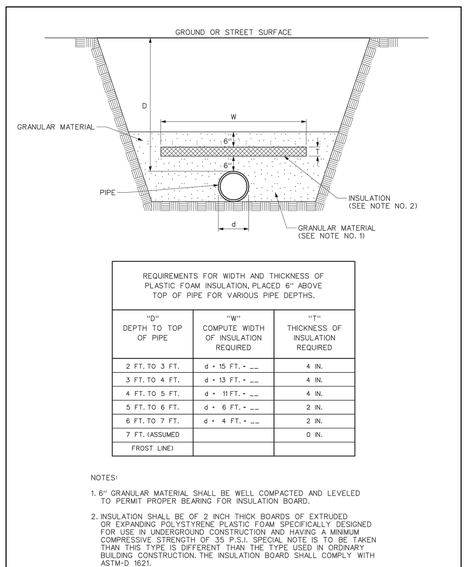

REQUIREMENTS FOR WIDTH AND THICKNESS OF PLASTIC FOAM INSULATION, PLACED 6" ABOVE TOP OF PIPE FOR VARIOUS PIPE DEPTHS.

"D" DEPTH TO TOP OF PIPE	"W" COMPUTE WIDTH OF INSULATION REQUIRED	"T" THICKNESS OF INSULATION REQUIRED
2 FT. TO 3 FT.	d + 15 FT. + ___	4 IN.
3 FT. TO 4 FT.	d + 13 FT. + ___	4 IN.
4 FT. TO 5 FT.	d + 11 FT. + ___	4 IN.
5 FT. TO 6 FT.	d + 6 FT. + ___	2 IN.
6 FT. TO 7 FT.	d + 4 FT. + ___	2 IN.
7 FT. (ASSUMED FROST LINE)		0 IN.

NOTES:

1. 6" GRANULAR MATERIAL SHALL BE WELL COMPACTED AND LEVELED TO PERMIT PROPER BEARING FOR INSULATION BOARD.
2. INSULATION SHALL BE OF 2 INCH THICK BOARDS OF EXTRUDED OR EXPANDING POLYSTYRENE PLASTIC FOAM SPECIFICALLY DESIGNED FOR USE IN UNDERGROUND CONSTRUCTION AND HAVING A MINIMUM COMPRESSIVE STRENGTH OF 35 P.S.I. SPECIAL NOTE IS TO BE TAKEN THAN THIS TYPE IS DIFFERENT THAN THE TYPE USED IN ORDINARY BUILDING CONSTRUCTION. THE INSULATION BOARD SHALL COMPLY WITH ASTM-D 1621.

CITY OF MINNETONKA — PIPE INSULATION — SCALE: NOT TO SCALE — STD PLATE NO: 570 — APPROVED: 5/2000 — REVISED: 5/2018

No.	REVISIONS	DATE	BY

Kimley»Horn
2021 KIMLEY-HORN AND ASSOCIATES, INC.
767 EUSTIS STREET, SUITE 100, ST. PAUL, MN 55114
PHONE: 651-645-4197
WWW.KIMLEY-HORN.COM

I HEREBY CERTIFY THAT THIS PLAN, SPECIFICATION OR REPORT WAS PREPARED BY ME OR UNDER MY DIRECT SUPERVISION AND THAT I AM A DULY LICENSED PROFESSIONAL ENGINEER UNDER THE LAWS OF THE STATE OF MINNESOTA.

WILLIAM D. MATZEK, P.E.
DATE: 12/20/2021 MN LIC. NO. 45790

KHA PROJECT	160284002
DATE	12/20/2021
SCALE	AS SHOWN
DESIGNED BY	ACL
DRAWN BY	AJW
CHECKED BY	WDM

UTILITY DETAILS

ISSUED FOR PERMIT - NOT FOR CONSTRUCTION

MISTER CAR WASH - MINNETONKA, MN

PREPARED FOR **MISTER CAR WASH**

MINNETONKA MN

SHEET NUMBER **C601**

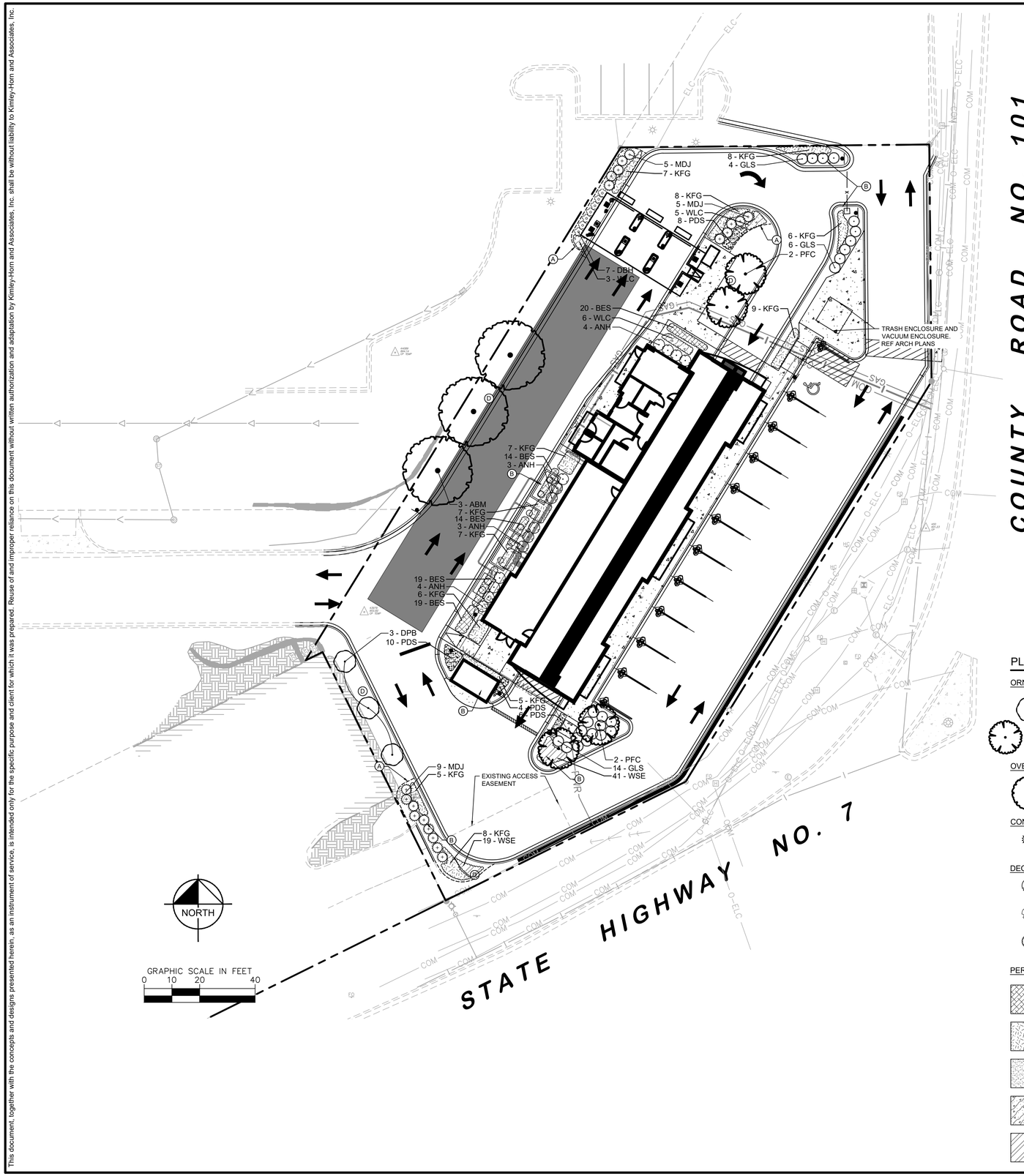

LANDSCAPE LEGEND

- EXISTING DECIDUOUS TREE (TYP.)
- EXISTING CONIFEROUS TREE (TYP.)
- EXISTING SHRUB (TYP.)
- EDGER (TYP.)
- APPROXIMATE LIMITS OF SOD / IRRIGATION, SOD ALL DISTURBED AREAS (TYP.)
- SEED/ SOD EDGE (TYP.)

LANDSCAPE KEYNOTES (A)

(A) EDGER (TYP.)
(B) DOUBLE SHREDDED HARDWOOD MULCH (TYP.)
(C) ROCK MULCH (TYP.)
(D) SOD (TYP.)
(E) MAINTENANCE STRIP (TYP.)

LANDSCAPE SUMMARY

REQUIRED LANDSCAPE MINIMUM VALUE IN CONFORMANCE WITH THE FOLLOWING TABLE:

PROJECT VALUE, INCLUDING BUILDING CONSTRUCTION, SITE PREPARATION, AND SITE IMPROVEMENTS		MINIMUM LANDSCAPE VALUE
BELOW $1,000,000	=	2%
$1,000,000 - $2,000,000	=	$20,000 + 1% OF PROJECT VALUE IN EXCESS OF $1,000,000
$2,000,000 - $3,000,000	=	$30,000 + .75% OF PROJECT VALUE IN EXCESS OF $2,000,000
$2,000,000 - $3,000,000	=	$37,500 + .25% OF PROJECT VALUE IN EXCESS OF $3,000,00
OVER $4,000,000	=	1%

*AT LEAST 25% OF PROPOSED PLANTS MUST BE BENEFICIAL TO POLLINATORS FROM THE CITY'S NATIVE PLANT LIST

*NO MORE THAN 25% OF TREES REQUIRED FROM 1 SPECIES

SCREENING REQUIRED: TRASH EQUIPMENT TO BE SCREENED YEAR ROUND FROM PUBLIC VIEW

SCREENING PROVIDED: SEE PLAN

PLANT SCHEDULE

ORNAMENTAL TREE	CODE	QTY	BOTANICAL NAME	COMMON NAME	CONT	CAL/SIZE
	DPB	3	BETULA PLATYPHYLLA `FARGO`	DAKOTA PINNACLE BIRCH	B & B	2" CAL.
	PFC	4	MALUS X `PRAIRIFIRE`	PRAIRIFIRE CRAB APPLE	B & B	2" CAL.
OVERSTORY TREE	**CODE**	**QTY**	**BOTANICAL NAME**	**COMMON NAME**	**CONT**	**CAL/SIZE**
	ABM	3	ACER X FREEMANII `AUTUMN BLAZE`	AUTUMN BLAZE MAPLE	B & B	2.5" CAL.
CONIFEROUS SHRUBS	**CODE**	**QTY**	**BOTANICAL NAME**	**COMMON NAME**	**CONT**	**SPACING**
	MDJ	19	JUNIPERUS SCOPULORUM `MEDORA`	MEDORA JUNIPER	#5 CONT.	4` O.C.
DECIDUOUS SHRUBS	**CODE**	**QTY**	**BOTANICAL NAME**	**COMMON NAME**	**CONT**	**SPACING**
	ANH	14	HYDRANGEA ARBORESCENS `ANNABELLE`	ANNABELLE HYDRANGEA	#5 CONT.	4` O.C.
	DBH	7	DIERVILLA LONICERA	DWARF BUSH HONEYSUCKLE	#5 CONT.	3` O.C.
	GLS	24	RHUS AROMATICA `GRO-LOW`	GRO-LOW FRAGRANT SUMAC	#5 CONT.	4` O.C.
PERENNIALS	**CODE**	**QTY**	**BOTANICAL NAME**	**COMMON NAME**	**SPACING**	
	BES	86	RUDBECKIA FULGIDA `GOLDSTURM`	BLACK-EYED SUSAN	18" o.c.	
	KFG	83	CALAMAGROSTIS X ACUTIFLORA `KARL FOERSTER`	KARL FOERSTER FEATHER REED GRASS	30" o.c.	
	PDS	28	SPOROBOLUS HETEROLEPIS	PRAIRIE DROPSEED	24" o.c.	
	WLC	14	NEPETA X FAASSENII `WALKERS LOW`	WALKERS LOW CATMINT	30" o.c.	
	WSE	60	ECHINACEA PURPUREA `WHITE SWAN`	WHITE SWAN CONEFLOWER	15" o.c.	

ISSUED FOR PERMIT - NOT FOR CONSTRUCTION

No.	REVISIONS	DATE	BY

Kimley»Horn
© 2021 KIMLEY-HORN AND ASSOCIATES, INC.
767 EUSTIS STREET, SUITE 100, ST. PAUL, MN 55114
PHONE: 651-645-4197
WWW.KIMLEY-HORN.COM

I HEREBY CERTIFY THAT THIS PLAN, SPECIFICATION OR REPORT WAS PREPARED BY ME OR UNDER MY DIRECT SUPERVISION AND THAT I AM A DULY LICENSED PROFESSIONAL LANDSCAPE ARCHITECT UNDER THE LAWS OF THE STATE OF MINNESOTA.

MITCHELL G. COOKAS
DATE: 12/20/2021 MN LIC. NO. 56522

KHA PROJECT	160284002
DATE	12/20/2021
SCALE	AS SHOWN
DESIGNED BY	CFK
DRAWN BY	CFK
CHECKED BY	MGC

LANDSCAPE PLAN

MISTER CAR WASH - MINNETONKA, MN
PREPARED FOR
MISTER CAR WASH
MINNETONKA MN

SHEET NUMBER
L100

K:\TWC_LDEV\mister car wash\minnetonka, mn\3 Design\CAD\plansheets\L1-LANDSCAPE PLAN.dwg December 20, 2021 - 6:01pm
This document, together with the concepts and designs presented herein, as an instrument of service, is intended only for the specific purpose and client for which it was prepared. Reuse of and improper reliance on this document without written authorization and adaptation by Kimley-Horn and Associates, Inc. shall be without liability to Kimley-Horn and Associates, Inc.

K:\TWC_LDEV\mister car wash\minnetonka, mn\3 Design\CAD\plansheets\L1-LANDSCAPE DETAILS.dwg December 20, 2021 - 6:02pm

This document, together with the concepts and designs presented herein, as an instrument of service, is intended only for the specific purpose and client for which it was prepared. Reuse of and improper reliance on this document without written authorization and adaptation by Kimley-Horn and Associates, Inc. shall be without liability to Kimley-Horn and Associates, Inc.

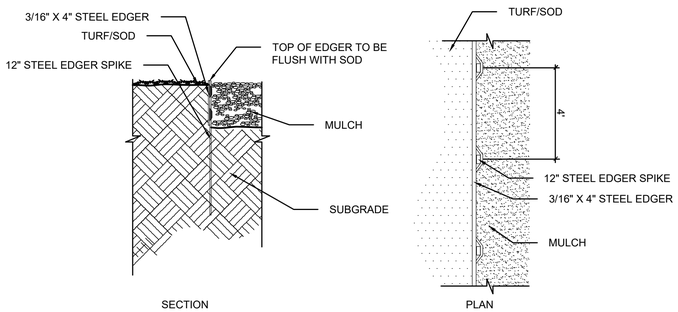

1 STEEL EDGER DETAIL

SCALE: N.T.S. L101

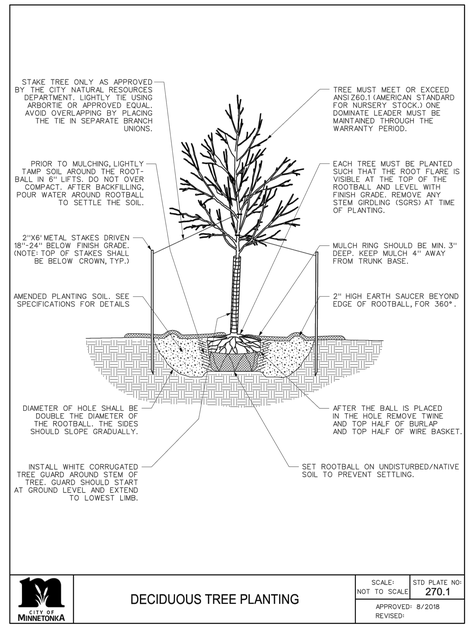

2 DECIDUOUS TREE PLANTING DETAIL

SCALE: N.T.S. L101

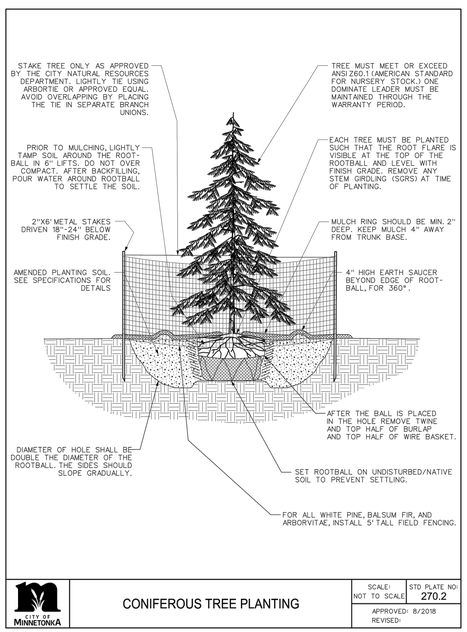

3 CONIFEROUS TREE PLANTING DETAIL

SCALE: N.T.S. L101

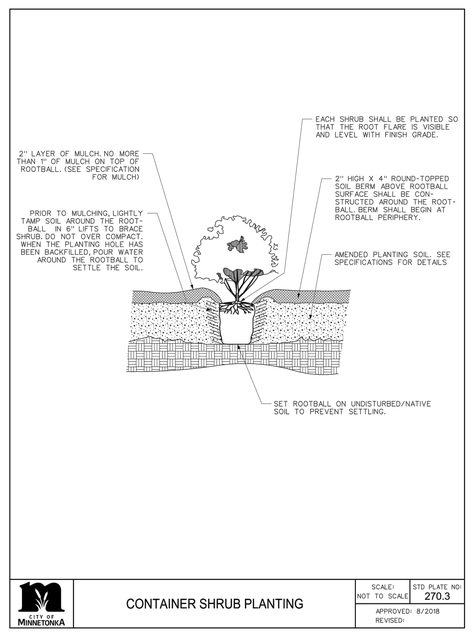

4 CONTAINER SHRUB PLANTING DETAIL

SCALE: N.T.S. L101

LANDSCAPE NOTES

1. CONTRACTOR SHALL CONTACT COMMON GROUND ALLIANCE AT 811 OR CALL811.COM TO VERIFY LOCATIONS OF ALL UNDERGROUND UTILITIES PRIOR TO INSTALLATION OF ANY PLANTS OR LANDSCAPE MATERIAL.
2. ACTUAL LOCATION OF PLANT MATERIAL IS SUBJECT TO FIELD AND SITE CONDITIONS.
3. NO PLANTING WILL BE INSTALLED UNTIL ALL GRADING AND CONSTRUCTION HAS BEEN COMPLETED IN THE IMMEDIATE AREA.
4. ALL SUBSTITUTIONS MUST BE APPROVED BY THE LANDSCAPE ARCHITECT PRIOR TO SUBMISSION OF ANY BID AND/OR QUOTE BY THE LANDSCAPE CONTRACTOR.
5. CONTRACTOR SHALL PROVIDE TWO YEAR GUARANTEE OF ALL PLANT MATERIALS. THE GUARANTEE BEGINS ON THE DATE OF THE LANDSCAPE ARCHITECT'S OR OWNER'S WRITTEN ACCEPTANCE OF THE INITIAL PLANTING. REPLACEMENT PLANT MATERIAL SHALL HAVE A ONE YEAR GUARANTEE COMMENCING UPON PLANTING.
6. ALL PLANTS TO BE SPECIMEN GRADE, MINNESOTA-GROWN AND/OR HARDY. SPECIMEN GRADE SHALL ADHERE TO, BUT IS NOT LIMITED BY, THE FOLLOWING STANDARDS:
   ALL PLANTS SHALL BE FREE FROM DISEASE, PESTS, WOUNDS, SCARS, ETC.
   ALL PLANTS SHALL BE FREE FROM NOTICEABLE GAPS, HOLES, OR DEFORMITIES.
   ALL PLANTS SHALL BE FREE FROM BROKEN OR DEAD BRANCHES.
   ALL PLANTS SHALL HAVE HEAVY, HEALTHY BRANCHING AND LEAFING.
   CONIFEROUS TREES SHALL HAVE AN ESTABLISHED MAIN LEADER AND A HEIGHT TO WIDTH RATIO OF NO LESS THAN 5:3.
7. PLANTS TO MEET AMERICAN STANDARD FOR NURSERY STOCK (ANSI Z60.1-2014 OR MOST CURRENT VERSION) REQUIREMENTS FOR SIZE AND TYPE SPECIFIED.
8. PLANTS TO BE INSTALLED AS PER MNLA & ANSI STANDARD PLANTING PRACTICES.
9. PLANTS SHALL BE IMMEDIATELY PLANTED UPON ARRIVAL AT SITE. PROPERLY HEEL-IN MATERIALS IF NECESSARY; TEMPORARY ONLY.
10. PRIOR TO PLANTING, FIELD VERIFY THAT THE ROOT COLLAR/ROOT FLAIR IS LOCATED AT THE TOP OF THE BALLED & BURLAP TREE. IF THIS IS NOT THE CASE, SOIL SHALL BE REMOVED DOWN TO THE ROOT COLLAR/ROOT FLAIR. WHEN THE BALLED & BURLAP TREE IS PLANTED, THE ROOT COLLAR/ROOT FLAIR SHALL BE EVEN OR SLIGHTLY ABOVE FINISHED GRADE.
11. OPEN TOP OF BURLAP ON BB MATERIALS; REMOVE POT ON POTTED PLANTS; SPLIT AND BREAK APART PEAT POTS.
12. PRUNE PLANTS AS NECESSARY - PER STANDARD NURSERY PRACTICE AND TO CORRECT POOR BRANCHING OF EXISTING AND PROPOSED TREES.
13. WRAP ALL SMOOTH-BARKED TREES - FASTEN TOP AND BOTTOM. REMOVE BY APRIL 1ST.
14. STAKING OF TREES AS REQUIRED; REPOSITION, PLUMB AND STAKE IF NOT PLUMB AFTER ONE YEAR.
15. THE NEED FOR SOIL AMENDMENTS SHALL BE DETERMINED UPON SITE SOIL CONDITIONS PRIOR TO PLANTING. LANDSCAPE CONTRACTOR SHALL NOTIFY LANDSCAPE ARCHITECT FOR THE NEED OF ANY SOIL AMENDMENTS.
16. BACKFILL SOIL AND TOPSOIL TO ADHERE TO A MODIFIED MN/DOT STANDARD SPECIFICATION 3877 (SELECT TOPSOIL BORROW) TO INCLUDE AT A MINIMUM 5% ORGANIC MATERIAL AND TO BE EXISTING TOP SOIL FROM SITE FREE OF ROOTS, ROCKS LARGER THAN ONE INCH, SUBSOIL DEBRIS, AND LARGE WEEDS UNLESS SPECIFIED OTHERWISE. MINIMUM 4" DEPTH TOPSOIL FOR ALL LAWN GRASS AREAS AND 12" DEPTH TOPSOIL FOR TREE, SHRUBS, AND PERENNIALS.
17. MULCH TO BE AT ALL TREE, SHRUB, PERENNIAL, AND MAINTENANCE AREAS. TREE AND SHRUB PLANTING BEDS SHALL HAVE 4" DEPTH OF DOUBLE SHREDDED HARDWOOD MULCH. DOUBLE SHREDDED HARDWOOD MULCH TO BE USED AROUND ALL PLANTS WITHIN TURF AREAS. PERENNIAL AND ORNAMENTAL GRASS BEDS SHALL HAVE 2" DEPTH DOUBLE SHREDDED HARDWOOD MULCH. MULCH TO BE FREE OF DELETERIOUS MATERIAL AND NATURAL IN COLOR, OR APPROVED EQUAL. ROCK MULCH TO BE RIVER ROCK, 1 1/2" DIAMETER, AT MINIMUM 3" DEPTH, OR APPROVED EQUAL. ROCK MULCH TO BE ON COMMERCIAL GRADE FILTER FABRIC, BY TYPAR, OR APPROVED EQUAL WITH NO EXPOSURE. MULCH AND FABRIC TO BE APPROVED BY OWNER PRIOR TO INSTALLATION. MULCH TO MATCH EXISTING CONDITIONS (WHERE APPLICABLE).
18. EDGING TO BE COMMERCIAL GRADE COL-MET (OR EQUAL) STEEL EDGING; 3/16" THICK, COLOR BLACK, OR SPADED EDGE, AS INDICATED. STEEL EDGING SHALL BE PLACED WITH SMOOTH CURVES AND STAKED WITH METAL SPIKES NO GREATER THAN 4 FOOT ON CENTER WITH TOP OF EDGER AT GRADE, FOR MOWERS TO CUT ABOVE WITHOUT DAMAGE. UTILIZE CURBS AND SIDEWALKS FOR EDGING WHERE POSSIBLE. SPADED EDGE TO PROVIDE V-SHAPED DEPTH AND WIDTH TO CREATE SEPARATION BETWEEN MULCH AND GRASS. INDIVIDUAL TREE, SHRUB, OR RAIN-GARDEN BEDS TO BE SPADED EDGE, UNLESS NOTED OTHERWISE. EDGING TO MATCH EXISTING CONDITIONS (WHERE APPLICABLE).
19. ALL DISTURBED AREAS TO BE SODDED OR SEEDED, UNLESS OTHERWISE NOTED. SOD TO BE STANDARD MINNESOTA GROWN AND HARDY BLUEGRASS MIX, FREE OF LAWN WEEDS. ALL TOPSOIL AREAS TO BE RAKED TO REMOVE DEBRIS AND ENSURE DRAINAGE. SLOPES OF 3:1 OR GREATER SHALL BE STAKED. SEED AS SPECIFIED AND PER MN/DOT SPECIFICATIONS. IF NOT INDICATED ON LANDSCAPE PLAN, SEE EROSION CONTROL PLAN.
20. PROVIDE IRRIGATION TO ALL PLANTED AREAS ON SITE. IRRIGATION SYSTEM TO BE DESIGN/BUILD BY LANDSCAPE CONTRACTOR. LANDSCAPE CONTRACTOR TO PROVIDE SHOP DRAWINGS TO LANDSCAPE ARCHITECT FOR APPROVAL PRIOR TO INSTALLATION OF IRRIGATION SYSTEM. CONTRACTOR TO PROVIDE OPERATION MANUALS, AS-BUILT PLANS, AND NORMAL PROGRAMMING. SYSTEM SHALL BE WINTERIZED AND HAVE SPRING STARTUP DURING FIRST YEAR OF OPERATION. SYSTEM SHALL HAVE ONE-YEAR WARRANTY ON ALL PARTS AND LABOR. ALL INFORMATION ABOUT INSTALLATION AND SCHEDULING CAN BE OBTAINED FROM THE GENERAL CONTRACTOR.
21. CONTRACTOR SHALL PROVIDE NECESSARY WATERING OF PLANT MATERIALS UNTIL THE PLANT IS FULLY ESTABLISHED OR IRRIGATION SYSTEM IS OPERATIONAL. OWNER WILL NOT PROVIDE WATER FOR CONTRACTOR.
22. REPAIR, REPLACE, OR PROVIDE SOD/SEED AS REQUIRED FOR ANY ROADWAY BOULEVARD AREAS ADJACENT TO THE SITE DISTURBED DURING CONSTRUCTION.
23. REPAIR ALL DAMAGE TO PROPERTY FROM PLANTING OPERATIONS AT NO COST TO OWNER.
24. MAINTAIN TREES, SHRUBS, AND OTHER PLANTS UNTIL PROJECT COMPLETION, BUT IN NO CASE, LESS THAN FOLLOWING PERIOD; 1 YEAR AFTER PROJECT COMPLETION. MAINTAIN TREES, SHRUBS, AND OTHER PLANTS BY PRUNING, CULTIVATING, AND WEEDING AS REQUIRED FOR HEALTHY GROWTH. RESTORE PLANTING SAUCERS. TIGHTEN AND REPAIR STAKE AND GUY SUPPORTS AND RESET TREES AND SHRUBS TO PROPER GRADES OR VERTICAL POSITION AS REQUIRED. RESTORE OR REPLACE DAMAGED WRAPPINGS. SPRAY AS REQUIRED TO KEEP TREES AND SHRUBS FREE OF INSECTS AND DISEASE. REPLENISH MULCH TO THE REQUIRED DEPTH. MAINTAIN LAWNS FOR 45 DAYS AFTER INSTALLING SOD INCLUDING MOWING WHEN SOD RECITES 4" IN HEIGHT. WEED PLANTING BEDS AND MULCH SAUCERS AT MINIMUM ONCE A MONTH DURING THE GROWING SEASON. PROVIDE A MONTHLY REPORT TO THE OWNER ON WEEDING AND OTHER MAINTENANCE RESPONSIBILITIES.
25. SEE ELECTRICAL PLANS FOR SITE LIGHTING.

No.	REVISIONS	DATE	BY

Kimley»Horn
2021 KIMLEY-HORN AND ASSOCIATES, INC.
767 EUSTIS STREET, SUITE 100, ST. PAUL, MN 55114
PHONE: 651-645-4197
WWW.KIMLEY-HORN.COM

I HEREBY CERTIFY THAT THIS PLAN, SPECIFICATION OR REPORT WAS PREPARED BY ME OR UNDER MY DIRECT SUPERVISION AND THAT I AM A DULY LICENSED PROFESSIONAL LANDSCAPE ARCHITECT UNDER THE LAWS OF THE STATE OF MINNESOTA.

Mitchell G. Cooksas

MITCHELL G. COOKSAS, PLA
DATE: 12/20/2021 MN LIC. NO. 56522

KHA PROJECT	160284002
DATE	12/20/2021
SCALE	AS SHOWN
DESIGNED BY	KHA
DRAWN BY	KHA
CHECKED BY	MGC

LANDSCAPE DETAILS

ISSUED FOR PERMIT - NOT FOR CONSTRUCTION

MISTER CAR WASH - MINNETONKA, MN

PREPARED FOR

MISTER CAR WASH

MINNETONKA MN

SHEET NUMBER

L101

MISTER CAR WASH

MINNETONKA, MN

HYDROSTOR HS180 STORMWATER CHAMBER SYSTEM

STORMWATER CHAMBER SPECIFICATIONS

1. CHAMBERS SHALL BE HYDROSTOR HS180 OR APPROVED EQUIVALENT.
2. CHAMBERS SHALL BE MADE FROM VIRGIN, IMPACT-MODIFIED POLYPROPYLENE COPOLYMERS.
3. CHAMBER ROWS SHALL PROVIDE CONTINUOUS, UNOBSTRUCTED INTERNAL SPACE WITH NO INTERNAL SUPPORT PANELS THAT WOULD IMPEDE FLOW OR LIMIT ACCESS FOR INSPECTION.
4. THE STRUCTURAL DESIGN OF THE CHAMBERS, THE STRUCTURAL BACKFILL, AND THE INSTALLATION REQUIREMENTS SHALL ENSURE THAT THE LOAD FACTORS SPECIFIED IN THE AASHTO LRFD BRIDGE DESIGN SPECIFICATIONS, SECTION 12.12, ARE MET FOR: 1) LONG-DURATION DEAD LOADS AND 2) SHORT-DURATION LIVE LOADS, BASED ON THE AASHTO DESIGN TRUCK WITH CONSIDERATION FOR IMPACT AND MULTIPLE VEHICLE PRESENCES.
5. CHAMBERS SHALL MEET THE REQUIREMENTS OF ASTM F2418-12, “STANDARD SPECIFICATION FOR POLYPROPYLENE (PP) CORRUGATED WALL STORMWATER COLLECTION CHAMBERS.”
6. ONLY CHAMBERS THAT ARE APPROVED BY THE SITE DESIGN ENGINEER WILL BE ALLOWED. THE CHAMBER MANUFACTURER SHALL SUBMIT THE FOLLOWING UPON REQUEST TO THE SITE DESIGN ENGINEER FOR APPROVAL BEFORE DELIVERING CHAMBERS TO THE PROJECT SITE:
   A. A STRUCTURAL EVALUATION SEALED BY A REGISTERED PROFESSIONAL ENGINEER THAT DEMONSTRATES THAT THE SAFETY FACTORS ARE GREATER THAN OR EQUAL TO 1.95 FOR DEAD LOAD AND 1.75 FOR LIVE LOAD, THE MINIMUM REQUIRED BY ASTM F2787 AND BY AASHTO FOR THERMOPLASTIC PIPE.
   B. A STRUCTURAL EVALUATION SEAL BY A REGISTERED PROFESSIONAL ENGINEER THAT DEMONSTRATES THAT THE LOAD FACTORS SPECIFIED IN THE AASHTO LRFD BRIDGE DESIGN SPECIFICATIONS, SECTION 12.12, ARE MET. THE 50 YEAR CREEP MODULUS DATA SPECIFIED IN ASTM F2418 MUST BE USED AS PART OF THE AASHTO STRUCTURAL EVALUATION TO CERTIFY LONG-TERM PERFORMANCE.
   C. STRUCTURAL CROSS SECTION DETAIL ON WHICH THE STRUCTURAL EVALUATION IS BASED.
7. CHAMBERS SHALL BE PRODUCED AT AN ISO 9001 CERTIFIED MANUFACTURING FACILITY.

NOTES:

1. PRIOR TO BEGINNING INSTALLATION OF HYDROSTOR STORMWATER CHAMBERS, A PRECONSTRUCTION MEETING SHALL BE HELD WITH A PRINSCO REPRESENTATIVE AND THE INSTALLERS.
2. HYDROSTOR STORMWATER CHAMBERS SHALL BE INSTALLED IN ACCORDANCE WITH THE PRINSCO “HYDROSTOR CONSTRUCTION GUIDE.”
3. HYDROSTOR STORMWATER CHAMBERS SHALL NOT BE INSTALLED ON WET OR UNSTABLE FOUNDATION OR SUBGRADE. FOUNDATION STONE MUST BE LEVEL AND COMPACTED.
4. PRINSCO RECOMMENDS PRETREATMENT OF STORMWATER RUNOFF USING A PRINSCO STORMWATER QUALITY UNIT AND/OR A SEDIMENT ROW.
5. MAINTAIN MINIMUM SPACING OF 6" (SPECIFICALLY HS180) BETWEEN CHAMBERS.
6. CONSTRUCTION EQUIPMENT SHALL NOT BE SITUATED ATOP THE CHAMBERS UNTIL SUFFICIENT COVER HAS BEEN ACHIEVED. DUMP TRUCKS, RUBBER TIRE LOADERS, EXCAVATORS, WHEEL OR ROLLER LOADS ARE NOT ALLOWED UNTIL PROPER FILL HEIGHTS HAVE BEEN ACHIEVED. REFER TO PRINSCO “HYDROSTOR CONSTRUCTION GUIDE” FOR SPECIFIC LOADING CRITERIA.
7. EMBEDMENT BACKFILL MUST BE PLACED USING THE FOLLOWING METHODS ONLY:
   - BACKFILL WITH AN EXCAVATOR LOCATED OUTSIDE THE EXCAVATION
   - BACKFILL WITH A STONE SHOOTER LOCATED OUTSIDE THE EXCAVATION
   - BACKFILL AS ROWS ARE BUILT WITH AN EXCAVATOR ON THE SUBGRADE OR FOUNDATION STONE
8. EMBEDMENT BACKFILL SHALL NOT BE PLACED USING THE “DUMP AND PUSH” METHOD. THIS MAY CAUSE DAMAGE TO THE CHAMBERS, WILL RESULT IN IMPROPER INSTALLATION AND WILL VOID THE PRINSCO STANDARD WARRANTY.
9. ONCE SUFFICIENT COVER IS ACHIEVED (12” FOR HS180), GRADING MAY COMMENCE WITH A SMALL DOZER OR SKID LOADER (LESS THAN 4.5 PSI GROUND PRESSURE). EQUIPMENT SHALL ALWAYS TRAVEL PARALLEL TO CHAMBER ROWS. SEE PRINSCO “HYDROSTOR CONSTRUCTION GUIDE” FOR SPECIFIC LOADING CRITERIA.

PROJECT INFORMATION:

- PROJECT NUMBER: 21-721
- PRINSCO SALES CONTACT: John Santjer: 320-905-7505 & Matt Baragary: 320-212-5837
- ENGINEER: ----
- CONTRACTOR: ----
- DISTRIBUTOR: ----

THE UNDERSIGNED HEREBY APPROVES THE ATTACHED (8) PAGES

CUSTOMER _____ DATE _____

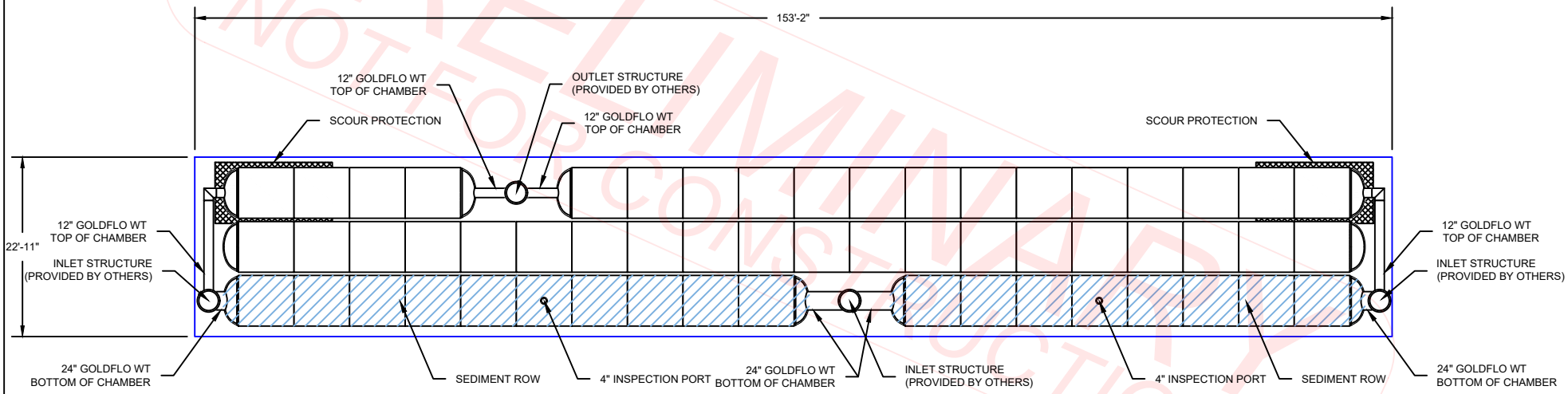

PRELIMINARY
NOT FOR CONSTRUCTION

BILL OF MATERIALS

PART	DESCRIPTION	QTY.	PART	DESCRIPTION	QTY.
A1	HYDROSTOR HS180 CHAMBER (HS180C)	56	A2	HYDROSTOR HS180 END CAP (HS180E)	2
A3	24GF20NP (FIELD CUT PIPE FOR MANIFOLD)	20'	A4	HYDROSTOR HS180 END CAP w/ 24" CORED HOLE BOTTOM (HS180E-24HB)	4
A5	12GF20NP (FIELD CUT PIPE FOR MANIFOLD)	60'	A6	HYDROSTOR HS180 END CAP w/ 12" CORED HOLE TOP (HS180E-12HT)	4
A7	12" SPLIT COUPLER (SC12)	4	A8	12" GOLDFLO 90° ELBOW (GFE12902)	2

TYPICAL ELEVATIONS - HS180 BEDS (ft)

MAXIMUM ALLOWABLE GRADE (TOP OF PAVEMENT/UNPAVED):	903.29
MINIMUM ALLOWABLE GRADE (UNPAVED WITH TRAFFIC):	897.29
MINIMUM ALLOWABLE GRADE (UNPAVED WITH NO TRAFFIC):	896.79
MINIMUM ALLOWABLE GRADE (BASE OF FLEXIBLE PAVEMENT):	896.79
MINIMUM ALLOWABLE GRADE (TOP OF RIGID CONCRETE PAVEMENT):	896.79
TOP OF STONE (MIN):	896.29
TOP OF CHAMBER:	895.29
12" TOP OF CHAMBER (INVERT):	893.72
24" BOTTOM OF CHAMBER (INVERT):	891.75
BOTTOM OF CHAMBER (MIN):	891.50
BOTTOM OF FOUNDATION STONE:	890.75

PROPOSED SYSTEM LAYOUT HS180

INSTALLED SYSTEM VOLUME (ft^3):	11,720
VOLUME BELOW EL 892.55 (ft^3):	4,010
INSTALLED SYSTEM FOOTPRINT (ft^2):	3,515
SYSTEM PERIMETER (ft):	352
TOTAL CHAMBERS:	56
TOTAL END CAPS:	10
STONE REQUIRED (yd^3):	478
NON-WOVEN GEOTEXTILE (yd^2):	1,198
WOVEN GEOTEXTILE (yd^2):	253

THIS DETAIL DEPICTS RECOMMENDED INSTALLATION PRACTICES AND IS NOT INTENDED TO SUPERSEDE ANY NATIONAL, STATE OR LOCAL SPECIFICATIONS. PRINSCO BEARS NO RESPONSIBILITY FOR ANY ALTERATIONS, REVISION AND/OR DEVIATION FROM THIS STANDARD DETAIL. PRINSCO HAS NOT PERFORMED ANY ENGINEERING OR DESIGN SERVICE FOR THIS PROJECT. THE DESIGN ENGINEER SHALL REVIEW THESE DETAILS PRIOR TO CONSTRUCTION TO VERIFY SUITABILITY. © PRINSCO, INC.

PRINSCO
ENGINEERED WITH INTEGRITY
1717 16TH ST. NE
WILLMAR, MN 56201
www.prinsco.com

TITLE: MISTER CAR WASH MINNETONKA, MN			REV: B
CHECKED BY: TJW	PRINSCO SALES CONTACT: John Santjer: 320-905-7505 & Matt Baragary: 320-212-5837		
DRAWN BY: JTC	DATE: 19-Jan-22	DRAWING NUMBER: 21-721	
SCALE: NTS	SHEET: 1 OF 2		

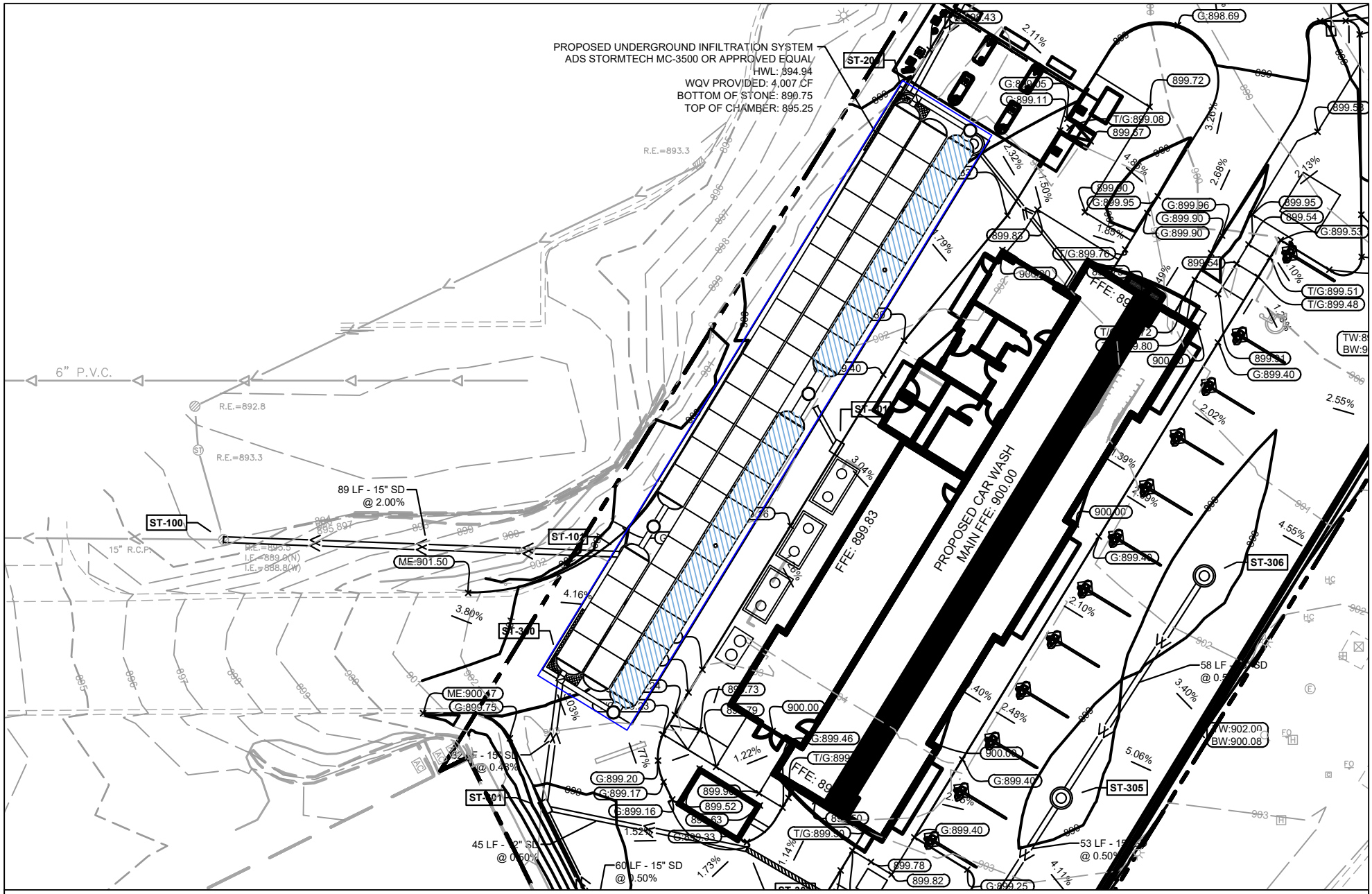

OVERLAY

THIS DETAIL DEPICTS RECOMMENDED INSTALLATION PRACTICES AND IS NOT INTENDED TO SUPERSEDE ANY NATIONAL, STATE OR LOCAL SPECIFICATIONS. PRINSCO BEARS NO RESPONSIBILITY FOR ANY ALTERATIONS, REVISION AND/OR DEVIATION FROM THIS STANDARD DETAIL. PRINSCO HAS NOT PERFORMED ANY ENGINEERING OR DESIGN SERVICE FOR THIS PROJECT. THE DESIGN ENGINEER SHALL REVIEW THESE DETAILS PRIOR TO CONSTRUCTION TO VERIFY SUITABILITY. © PRINSCO, INC.

PRINSCO
ENGINEERED WITH INTEGRITY
1717 16TH ST. NE
WILLMAR, MN 56201
www.prinsco.com

TITLE: MISTER CAR WASH MINNETONKA, MN			REV: B
CHECKED BY: TJW	PRINSCO SALES CONTACT: John Santjer: 320-905-7505 & Matt Baragary: 320-212-5837		
DRAWN BY: JTC	DATE: 19-Jan-22	DRAWING NUMBER: 21-721	
SCALE: NTS	SHEET: 2 OF 2		

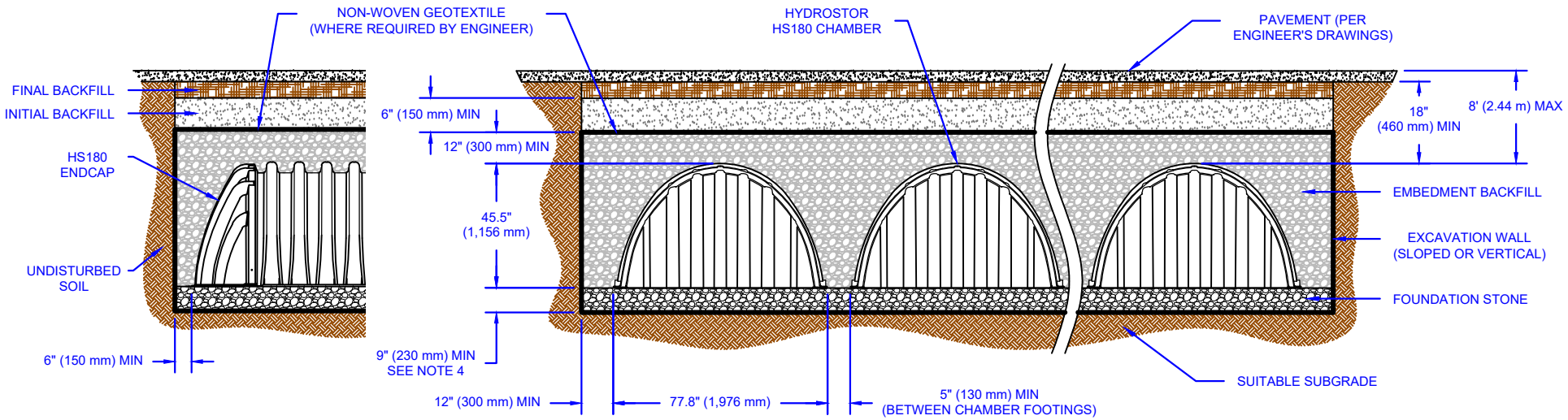

NOTES:

1. HYDROSTOR HS180 CHAMBERS SHALL BE DESIGNED IN ACCORDANCE WITH ASTM F2787 AND SHALL CONFORM TO THE REQUIREMENTS OF ASTM F2418. HS180 CHAMBERS SHALL BE INSTALLED IN ACCORDANCE WITH THE MANUFACTURER'S LATEST INSTALLATION GUIDELINES.
2. **SUBGRADE:** TRENCH BOTTOMS WITH UNSTABLE OR UNYIELDING MATERIAL SHALL BE EXCAVATED TO A DEPTH DIRECTED BY THE ENGINEER AND REPLACED WITH SUITABLE MATERIAL. FOR UNSTABLE MATERIALS, GEOTEXTILE MAY BE USED TO STABILIZE THE TRENCH BOTTOM, IF DIRECTED BY THE ENGINEER. THE DESIGN ENGINEER IS RESPONSIBLE FOR VERIFYING SUBGRADE SUITABILITY.
3. **GEOTEXTILE:** AN AASHTO M288 CLASS 2 OR 3 NON-WOVEN GEOTEXTILE SHOULD BE USED FOR EMBEDMENT BACKFILL MATERIAL 3/4 TO 2 INCH (19 - 51 MM). GEOTEXTILE FILTER FABRIC IS PLACED AROUND THE SYSTEM TO PREVENT NATIVE SOIL FROM MIGRATING INTO THE EMBEDMENT BACKFILL MATERIAL. TO ENSURE FABRIC IS SUITABLE WITH IN SITU SOILS, A GEOTECHNICAL ENGINEER SHOULD BE CONSULTED.
4. **FOUNDATION STONE:** SUITABLE MATERIAL SHALL BE A 3/4 - 2 INCH (19 - 51 mm), WASHED, CRUSHED ANGULAR STONE, OR AASHTO M43 SIZES (3, 357, 4, 467, 5, 56, 57) WITH WASHED, CRUSHED, ANGULAR STONE ADDED TO THE GRADATION, e.g., WASHED, CRUSHED, ANGULAR #3 (AASHTO M43) STONE. MINIMUM FOUNDATION STONE THICKNESS TO BE DETERMINED BY DESIGN ENGINEER. MINIMUM OF 9" (230 mm) RECOMMENDED. REFER TO PRINSCO DESIGN MANUAL FOR ADDITIONAL GUIDANCE. COMPACTION SHOULD BE DONE IN LIFTS OF NO MORE THAN 9 INCHES (230 mm).
5. **EMBEDMENT BACKFILL:** SUITABLE MATERIAL SHALL BE A 3/4 - 2 INCH (19 - 51 mm), WASHED, CRUSHED ANGULAR STONE, OR AASHTO M43 SIZES (3, 357, 4, 467, 5, 56, 57) WITH WASHED, CRUSHED, ANGULAR STONE ADDED TO THE GRADATION, e.g., WASHED, CRUSHED, ANGULAR #3 (AASHTO M43) STONE. EMBEDMENT BACKFILL SHALL EXTEND FROM TOP OF BEDDING TO NOT LESS THAN 12 INCHES (300 mm) ABOVE THE TOP OF THE CHAMBER. NO COMPACTION IS REQUIRED BUT AN EFFORT SHOULD BE MADE TO HAND KNIFE STONE IN BETWEEN ALL CORRUGATIONS.
6. **INITIAL BACKFILL:** SUITABLE MATERIAL SHALL BE A GRANULAR, WELL GRADED SOIL WITH LESS THAN 35% FINES OR AASHTO M43 SIZES (3, 357, 4, 467, 5, 56, 57, 6, 67, 68, 7, 78, 8, 89, 9, 10). MOST PAVEMENT SUBBASE MATERIALS FALL WITHIN THIS GRADING CRITERIA. INITIAL BACKFILL SHALL EXTEND FROM TOP OF EMBEDMENT BACKFILL TO NOT LESS THAN 18 INCHES (460 mm) ABOVE THE TOP OF THE CHAMBER. COMPACT TO A MINIMUM OF 95% STANDARD PROCTOR DENSITY.
7. **FINAL BACKFILL:** SUITABLE MATERIALS SHALL BE ANY SOIL DIRECTED BY THE ENGINEER. FINAL BACKFILL SHALL EXTEND FROM TOP OF INITIAL BACKFILL TO NO MORE THAN 8 FEET (2.44 m) ABOVE THE TOP OF THE CHAMBER. COMPACTION LEVELS SHOULD FOLLOW ENGINEERS RECOMMENDATIONS.
8. **MINIMUM COVER:** FOR TRAFFIC APPLICATIONS A MINIMUM COVER OF 18 INCHES (460 mm) IS REQUIRED, MEASURED FROM THE TOP OF THE CHAMBER TO THE BOTTOM OF FLEXIBLE PAVEMENT OR TO THE TOP OF RIGID PAVEMENT. FOR UNPAVED INSTALLATIONS WHERE RUTTING MAY OCCUR, INCREASE COVER TO 30 INCHES (750 mm) FOR H-20 LOADING. ADDITIONAL COVER MAY BE REQUIRED FOR CONSTRUCTION LOADS.
9. **MAXIMUM COVER:** A COVER HEIGHT OF OVER 8 FEET (2.44 m) IS NOT RECOMMENDED. COVER HEIGHT IS MEASURED FROM THE TOP OF THE CHAMBER TO THE TOP OF THE PAVEMENT.
10. **LOAD RATING:** HS180 CHAMBERS ARE TRAFFIC RATED FOR H-20 VEHICLES WITH ADDITIONAL CONSIDERATION FOR LANE LOADING, COMMONLY REFERRED TO AS HL-93 LOAD RATING (AASHTO DESIGN TRUCK).

THIS DETAIL DEPICTS RECOMMENDED INSTALLATION PRACTICES AND IS NOT INTENDED TO SUPERSEDE ANY NATIONAL, STATE OR LOCAL SPECIFICATIONS. PRINSCO BEARS NO RESPONSIBILITY FOR ANY ALTERATIONS, REVISION AND/OR DEVIATION FROM THIS STANDARD DETAIL. PRINSCO HAS NOT PERFORMED ANY ENGINEERING OR DESIGN SERVICE FOR THIS PROJECT. THE DESIGN ENGINEER SHALL REVIEW THESE DETAILS PRIOR TO CONSTRUCTION TO VERIFY SUITABILITY. © PRINSCO, INC.

PRINSCO
WATER MANAGEMENT SOLUTIONS
1717 16TH ST. NE
WILLMAR, MN 56201
www.prinsco.com

TITLE: HYDROSTOR HS180 - CROSS SECTION			
DRAWN BY: SLE	DATE: 12-Oct-21	DRAWING NUMBER: D-7-200A	
SCALE: NTS	SHEET: 1 OF 1		

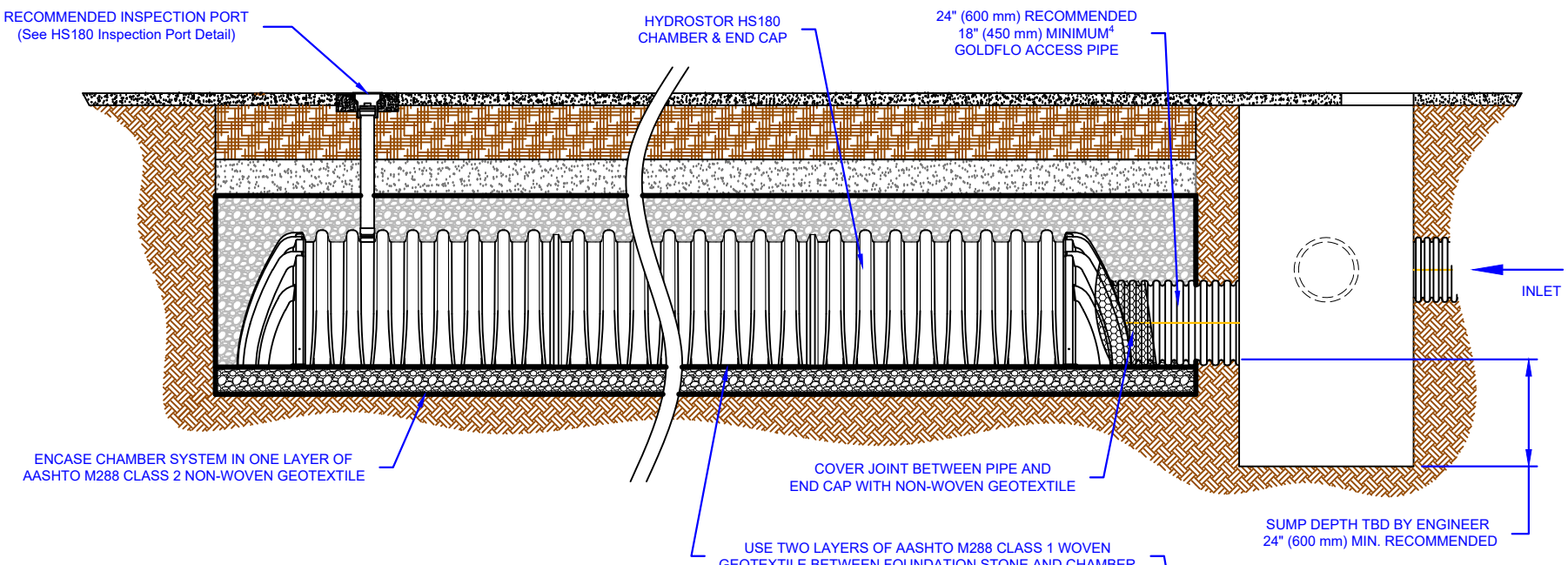

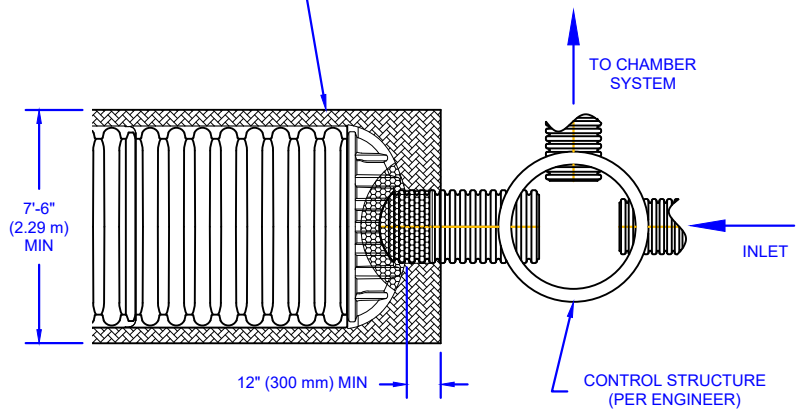

NOTES:

1. HYDROSTOR HS180 CHAMBERS SHALL BE DESIGNED IN ACCORDANCE WITH ASTM F2787 AND SHALL CONFORM TO THE REQUIREMENTS OF ASTM F2418. HS180 CHAMBERS SHALL BE INSTALLED IN ACCORDANCE WITH THE MANUFACTURER'S LATEST INSTALLATION GUIDELINES.
2. **GEOTEXTILE:** TWO DIFFERENT GEOTEXTILES WILL BE USED IN CREATING A FUNCTIONING SEDIMENT ROW. TO ENSURE FABRIC IS SUITABLE WITH IN SITU SOILS, A GEOTECHNICAL ENGINEER SHOULD BE CONSULTED.

- A NON-WOVEN GEOTEXTILE FILTER FABRIC 4 oz/yd^2 (136 g/m^2) OR HEAVIER SHOULD BE USED AROUND THE PERIMETER OF THE CHAMBER SYSTEM FOR EMBEDMENT BACKFILL MATERIAL SIZED 3/4 - 1 1/2 INCH (19-38 mm). A 6 oz/yd^2 (203 g/m^2) NON-WOVEN GEOTEXTILE FILTER FABRIC SHOULD BE USED FOR EMBEDMENT BACKFILL MATERIAL SIZED 1 1/2 - 2 INCH (38-51 mm). GEOTEXTILE FILTER FABRIC IS PLACED AROUND THE SYSTEM TO PREVENT NATIVE SOIL FROM MIGRATING INTO THE EMBEDMENT BACKFILL MATERIAL.
- TWO LAYERS OF 6 oz/yd^2 (203 g/m^2) WOVEN FABRIC IS PLACED BETWEEN THE FOUNDATION AND THE CHAMBER FOR THE CREATION OF THE SEDIMENT ROW. THE TWO LAYERS PROVIDE A PROTECTIVE BARRIER FOR THE EMBEDMENT BACKFILL BUT STILL ALLOW WATER TO INFILTRATE INTO THE SYSTEM. THE WOVEN GEOTEXTILE IS DURABLE ENOUGH TO ALLOW JETTING TO CLEAN THE SEDIMENT ROW.

3. **INSPECTION AND MAINTENANCE**: INSPECTION OF THE SYSTEM SHOULD OCCUR BIANNUALLY TO ENSURE LARGE AMOUNTS OF SEDIMENT OR DEBRIS HAVE NOT BEEN DEPOSITED IN THE SEDIMENT ROW. DURING THE FIRST YEAR INSPECTION SHOULD OCCUR MORE FREQUENTLY DUE TO CONSTRUCTION SEDIMENT LOADING. TO CLEAN THE SYSTEM, A JET/VAC PROCESS CAN BE USED TO REMOVE SEDIMENT AND DEBRIS FROM THE SEDIMENT ROW. FOR MORE INFORMATION, REFER TO PRINSCO'S "RETENTION/DETENTION CLEANING AND MAINTENANCE" TECHNICAL NOTE.
4. **ACCESS PIPE**: PRINSCO RECOMMENDS A 24 INCH (600 mm) DIAMETER ACCESS PIPE TO THE SEDIMENT ROW. CONTACT YOUR LOCAL SALES REPRESENTATIVE WITH ANY QUESTIONS.

THIS DETAIL DEPICTS RECOMMENDED INSTALLATION PRACTICES AND IS NOT INTENDED TO SUPERSEDE ANY NATIONAL, STATE OR LOCAL SPECIFICATIONS. PRINSCO BEARS NO RESPONSIBILITY FOR ANY ALTERATIONS, REVISION AND/OR DEVIATION FROM THIS STANDARD DETAIL. PRINSCO HAS NOT PERFORMED ANY ENGINEERING OR DESIGN SERVICE FOR THIS PROJECT. THE DESIGN ENGINEER SHALL REVIEW THESE DETAILS PRIOR TO CONSTRUCTION TO VERIFY SUITABILITY. © PRINSCO, INC.

PRINSCO
ENGINEERED WITH INTEGRITY
1717 16TH ST. NE
WILLMAR, MN 56201
www.prinsco.com

TITLE: HYDROSTOR HS180 - SEDIMENT ROW			REV:
DRAWN BY: TJW	DATE: 13-Apr-21	DRAWING NUMBER: D-7-202	
SCALE: NTS	SHEET: 1 OF 1		

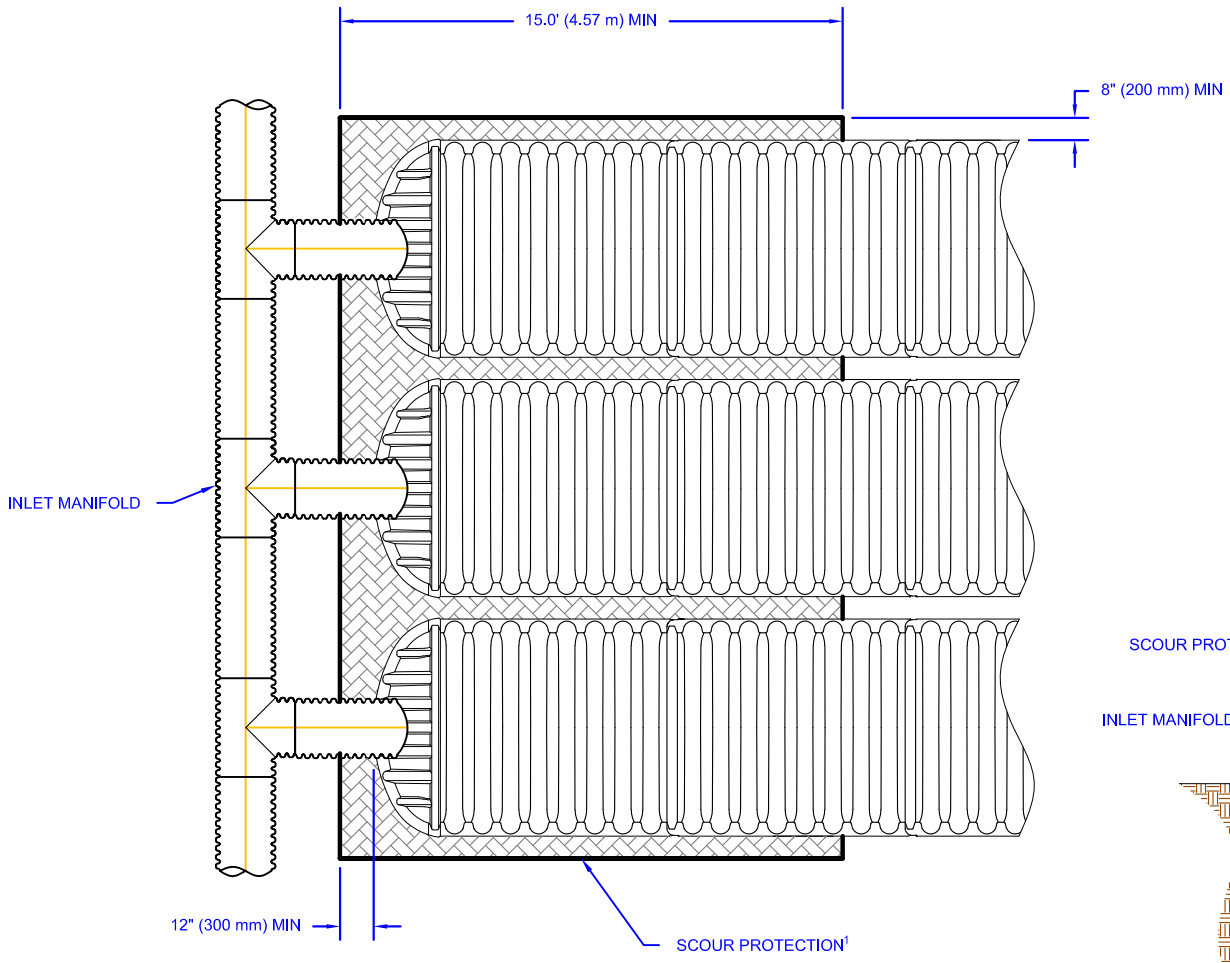

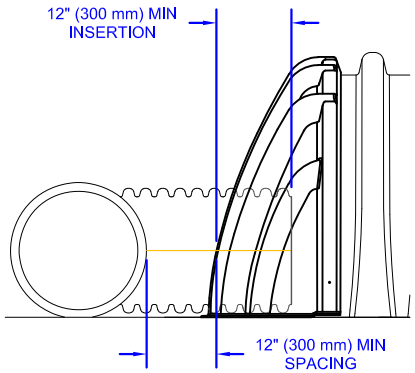

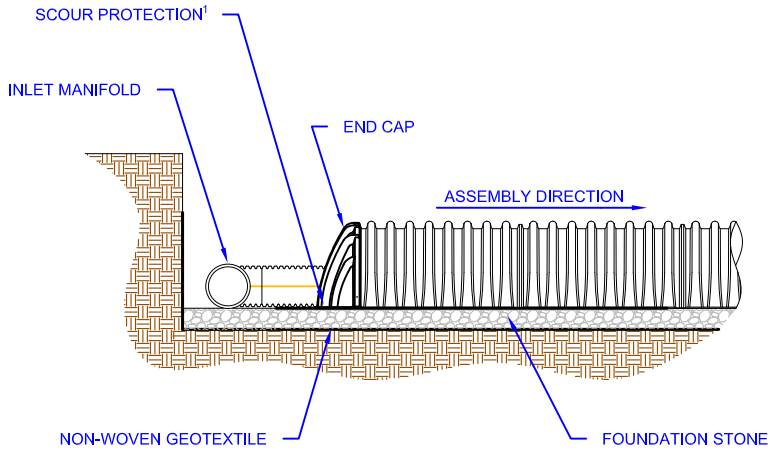

NOTES:

1. SCOUR PROTECTION SHOULD USE A MIN 6 oz/yd^2 (203 g/m^2) WOVEN GEOTEXTILE. GEOTEXTILE SHOULD MEET AASHTO M288 CLASS 1 SPECIFICATION.
2. SCOUR PROTECTION IS ONLY NEEDED WITH CHAMBER ROWS CONNECTED TO THE INLET MANIFOLD.

THIS DETAIL DEPICTS RECOMMENDED INSTALLATION PRACTICES AND IS NOT INTENDED TO SUPERSEDE ANY NATIONAL, STATE OR LOCAL SPECIFICATIONS. PRINSCO BEARS NO RESPONSIBILITY FOR ANY ALTERATIONS, REVISION AND/OR DEVIATION FROM THIS STANDARD DETAIL. PRINSCO HAS NOT PERFORMED ANY ENGINEERING OR DESIGN SERVICE FOR THIS PROJECT. THE DESIGN ENGINEER SHALL REVIEW THESE DETAILS PRIOR TO CONSTRUCTION TO VERIFY SUITABILITY. © PRINSCO, INC.

PRINSCO
ENGINEERED WITH INTEGRITY
1717 16TH ST. NE
WILLMAR, MN 56201
www.prinsco.com

TITLE: HYDROSTOR HS180 - SCOUR PROTECTION			REV:
DRAWN BY: TSS	DATE: 11-Oct-18	DRAWING NUMBER: D-7-207	
SCALE: NTS	SHEET: 1 OF 1		

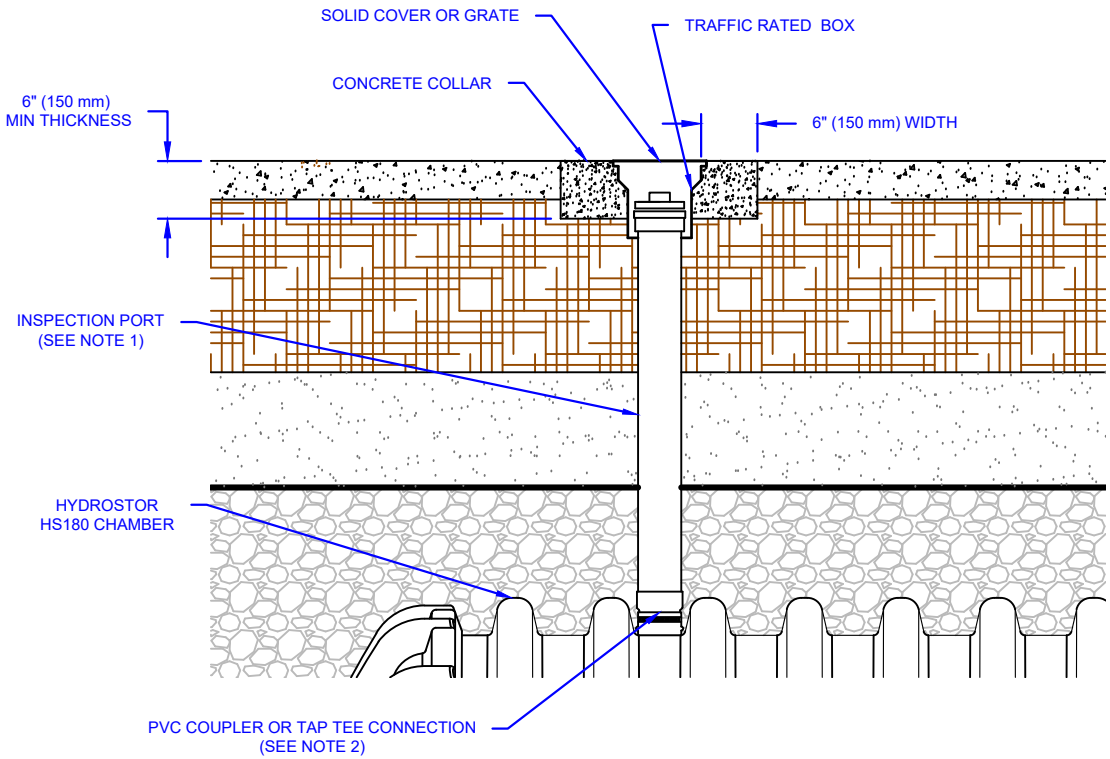

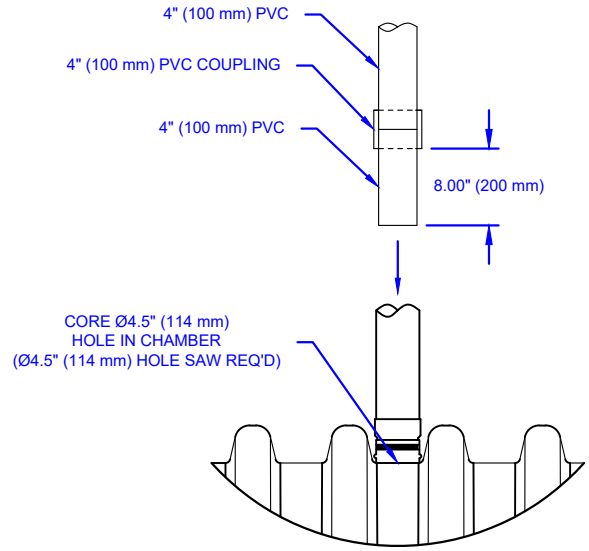

4" PVC COUPLER
CONNECTION DETAIL

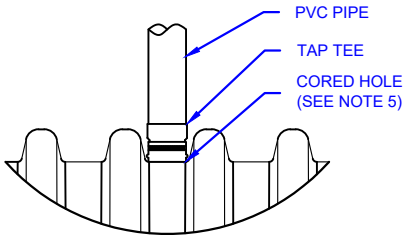

4" (100 mm) TAP TEE
CONNECTION DETAIL
(SEE NOTE 1)

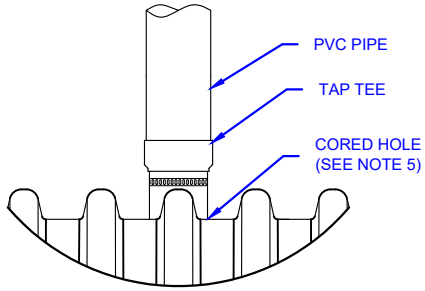

6" (150 mm) & 8" (200 mm) TAP TEE
CONNECTION DETAIL
(SEE NOTE 1)

NOTES:

1. 4" (100 mm) INSPECTION PORTS MAY BE CONNECTED THROUGH A CORED HOLE, CENTERED ON A VALLEY BETWEEN (2) TWO CORRUGATIONS.
   6" (150 mm) OR 8" (200 mm) INSPECTION PORTS MAY BE CONNECTED THROUGH A CORED HOLE, CENTERED ON A CORRUGATION.
2. TAP TEE CONNECTION CAN CONSIST OF QWICKSEAL, INSERTA TEE OR APPROVED ENGINEERING EQUIVALENT.
3. ALL PVC FITTINGS TO BE SOLVENT CEMENTED.
4. PVC MAY BE EITHER SDR 35 OR SCH 40
5. CORED HOLE SIZES AS FOLLOWS: 4" (100 mm) CUT TO 5" (125 mm); 6" (150 mm) CUT TO 7" (180 mm); 8" (200 mm) CUT TO 9" (230 mm)

THIS DETAIL DEPICTS RECOMMENDED INSTALLATION PRACTICES AND IS NOT INTENDED TO SUPERSEDE ANY NATIONAL, STATE OR LOCAL SPECIFICATIONS. PRINSCO BEARS NO RESPONSIBILITY FOR ANY ALTERATIONS, REVISION AND/OR DEVIATION FROM THIS STANDARD DETAIL. PRINSCO HAS NOT PERFORMED ANY ENGINEERING OR DESIGN SERVICE FOR THIS PROJECT. THE DESIGN ENGINEER SHALL REVIEW THESE DETAILS PRIOR TO CONSTRUCTION TO VERIFY SUITABILITY. © PRINSCO, INC.

PRINSCO
ENGINEERED WITH INTEGRITY
1717 16TH ST. NE
WILLMAR, MN 56201
www.prinsco.com

TITLE: HYDROSTOR HS180 - INSPECTION PORT			REV:
DRAWN BY: ARB	DATE: 31-May-19	DRAWING NUMBER: D-7-203	
SCALE: NTS	SHEET: 1 OF 1		

HydroStor™ HS180

Chamber Specifications	
Chamber Size (L x W x H)	88.7" x 77.8" x 45.5" (2,253 x 1,976 x 1,156 mm)
Installed Length	85.3" (2,167 mm)
Chamber Storage	113.6 ft^3 (3.2 m^3)
Min. Installed Storage*	176.0 ft^3 (5.0 m^3)
Weight	127 lbs (57.6 kg)
Chambers / Pallet	19
Approx. Weight / Pallet	2,600 lbs (1,179 kg)

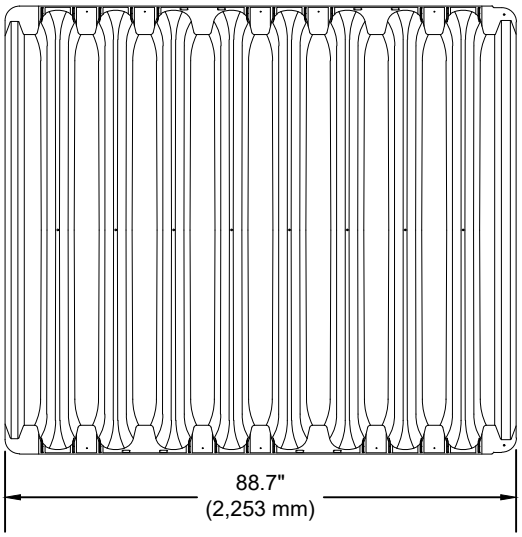

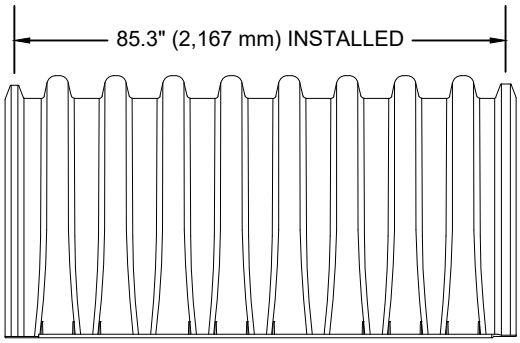

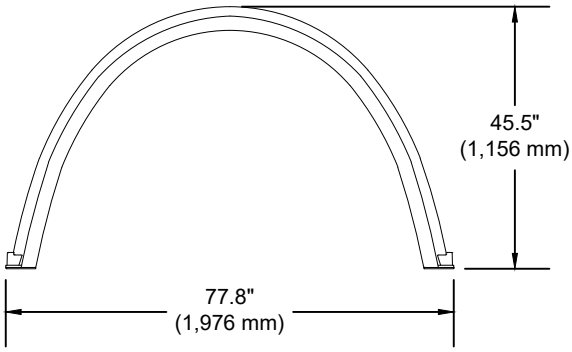

End Cap Specifications	
End Cap Size (L x W x H)	24.0" x 78.5" x 44.7" (609 x 1,994 x 1,136 mm)
Installed Length	22.1" (561 mm)
End Cap Storage	15.3 ft^3 (0.4 m^3)
Min. Installed Storage*	44.8 ft^3 (1.3 m^3)
Weight	52 lbs (23.6 kg)

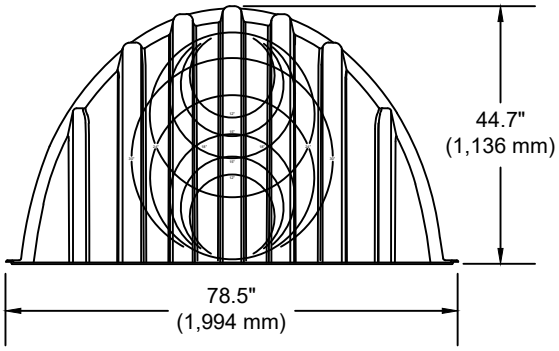

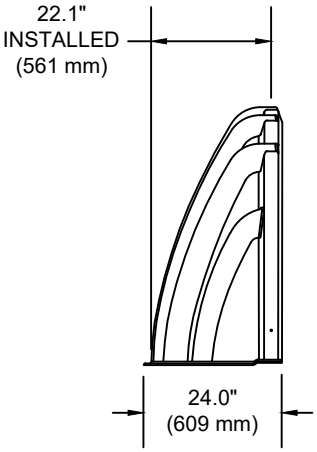

*ASSUMES 12" (300 mm) STONE ABOVE CHAMBERS/END CAPS, 9" (230 mm) OF STONE FOR FOUNDATION STONE, 6" (150 mm) OF STONE BETWEEN CHAMBERS/END CAPS, 6" (150 mm) OF STONE PERIMETER IN FRONT OF END CAPS AND 40% STONE POROSITY.

THIS DETAIL DEPICTS RECOMMENDED INSTALLATION PRACTICES AND IS NOT INTENDED TO SUPERSEDE ANY NATIONAL, STATE OR LOCAL SPECIFICATIONS. PRINSCO BEARS NO RESPONSIBILITY FOR ANY ALTERATIONS, REVISION AND/OR DEVIATION FROM THIS STANDARD DETAIL. PRINSCO HAS NOT PERFORMED ANY ENGINEERING OR DESIGN SERVICE FOR THIS PROJECT. THE DESIGN ENGINEER SHALL REVIEW THESE DETAILS PRIOR TO CONSTRUCTION TO VERIFY SUITABILITY. © PRINSCO, INC.

PRINSCO WATER MANAGEMENT SOLUTIONS
1717 16TH ST. NE
WILLMAR, MN 56201
www.prinsco.com

TITLE: HYDROSTOR HS180 - SPECIFICATION			
DRAWN BY: SLE	DATE: 12-Oct-21	DRAWING NUMBER: D-7-201	
SCALE: NTS	SHEET: 1 OF 1		